DESIGN FEATURES

DURABLE :

· 1 piece non-welded PFA molded DSS Disc stem
· Precision casting WCB/CF8M Bodies

TRIPLE SEAL:

· Triple Seal:Spring loaded Mechanical seal,Radial Lip Seal,FPM
· China ONLY ONE Manufacturer 400Mpa Isostatic pressing PTFE seat,consistent density

ANTI-CORROSION:

· Material: Epoxy powder
· Coating Thickness:200-250μm
· Spraying temp: over 200℃. Doesn't fade, even wipe with diethyl ether

QUALITY STANDARD

· 100% quality test, follow DIN, ASTM, JIS, GB/T, ISO, BS EN, API
· ONLY ONE Manufacturer get CE certification up to DN1800
· 2 years warranty.15000 times On off test,30000 times Destructive experiment

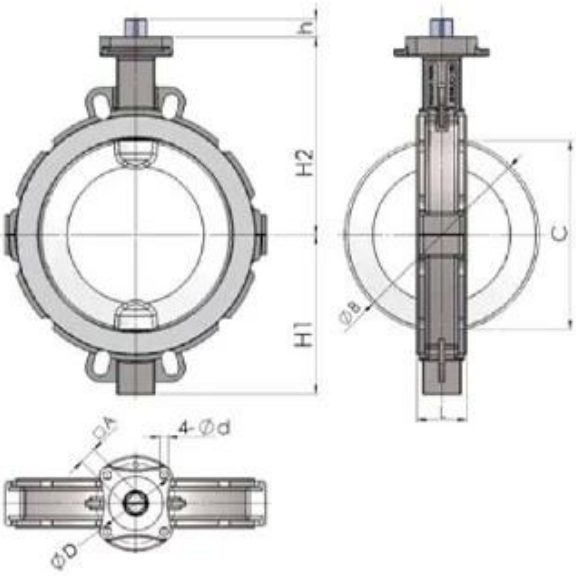

Wafer

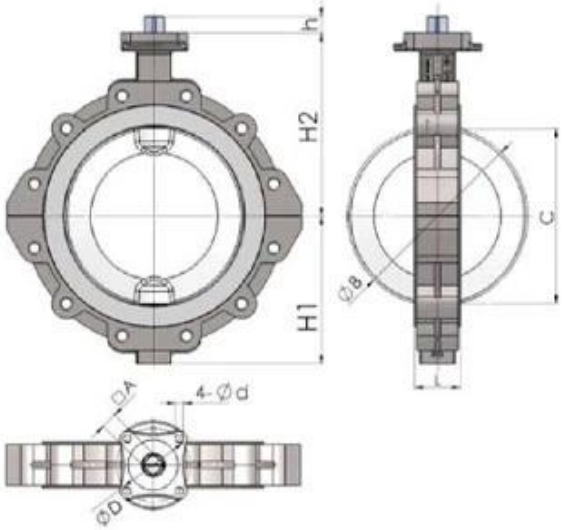

Lug

IMPERIAL DIMENSIONS:Inches										
Size	L	H1	H2	h	A	B	C	D	d	IS05211
NPS2	1.69	2.20	5.31	0.47	0.43	2.01	1.08	1.97	0.28	F05
NPS2 1/2	1.81	3.35	5.91	0.47	0.43	2.72	1.99	1.97	0.28	F05
NPS3	1.81	3.74	6.30	0.63	0.55	3.27	2.70	2.76	0.35	F07
NPS4	2.05	4.13	7.09	0.63	0.55	4.06	3.50	2.76	0.35	F07
NPS5	2.20	4.92	7.68	0.63	0.55	5.00	4.49	2.76	0.35	F07
NPS6	2.20	5.71	10.04	0.63	0.55	5.98	5.57	2.76	0.35	F07
NPS8	2.36	6.69	9.45	0.83	0.75	7.99	7.64	4.02	0.47	F10
NPS10	2.68	8.07	11.81	0.94	0.87	10.00	9.65	4.92	0.51	F12
NPS12	3.07	9.84	12.20	1.14	1.06	12.01	11.61	4.92	0.51	F12

APPLICATION SCENARIO

Industrial water application | Power plant | Sea water desalination | Water treatment | Water supply and drainage | HAVC | Food and drug | Water transport

RKSfluid
Proven Technology-Superior Features-Legendary Value

RKSfluid
Proven Technology-Superior Features-Legendary Value

RKSfluid
Proven Technology-Superior Features-Legendary Value

RKSfluid
Proven Technology-Superior Features-Legendary Value

RKSfluid
Proven Technology-Superior Features-Legendary Value

RKSfluid
Proven Technology-Superior Features-Legendary Value

COMPANY INFORMATION

i مجال الأعمال: منتجات التحكم في السوائل والتكنولوجيا ومنتجات حماية البيئة.

ii مراكز تصنيع CNC المتقدمة ، وخلايا العمليات المهنية ، ومعدات اللحام الواسعة المدى ، وخطوط التجميع التلقائية والطلاء.

iii الوحدة المرجعية القياسية في الصين ، للمشاركة في تطوير معايير صناعة الصمامات ذات الصلة.

iv أنشأنا مركزًا للبحث والتطوير في هيوستن ، تكساس ، في الولايات المتحدة.

v معيار المنتج: GB ، German Standard ، American Standard ، Tuv CE ، ISO 9001 ، ADWO-2000 ، TS ، PED ، WRC WRAS ، KTW ، API 6D ، API609.

السادس الإنتاج الرئيسي: صمام الفراشة ، صمام الكرة ، صمام البوابة ، صمام فحص ، صمامات الكرة الأرضية ، تجهيزات الأنابيب ، مشغل يدوي / هوائي / كهربائي ، أجزاء الصمام.

01
21 years of professional experience
02
4 factories
03
Independent research and development team
28 top senior professional researchers
04
2 professional testing centers
05
100% high level ex-factory inspection
06
High quality imported materials
07
2 years quality assurance, repair and replacement

COMPANY QUALIFICATION

COMPANY EXHIBITION

□□□□□□□□□□

□□□□□□□□ □□□□ □□□□□□□□□□ □□ □□□ □ □□□□□□ □□□ □□□□□ □□□ □□□ :□
A: .□□□□□□□□□□ □□□□ □ □□□□□□□ □ □□□□□ □ □□□□□□□ □□□□ □ □□□□□□□□ □□□□

□□□□□ □□□□ □ □□□□□□□□ □□□□□ □□□□□ □□ :□
A: □□□□□□□ □□□□□ □□□□□□ □ □□□□□□□□□□ □ □□□□□□□□.RKSfluid □□□□□□□□□ □□□□□ □□□□□□□□
.□□□□□□ □□□ □ □□□□□□ □□□□.□□□□□□□□□ □□□□□□□ □□□□□□□□

□□□□□□□□□□ □□□□□ □□ □□ :□
□□□□□ :□ RKSfluid .□□□□□□□ □□□□ □□□□□□□□ □□□□ □□ □□□□ □□□□□ □□□□□ □□□

□□□□□□□ □□□□ :□
.□□□□□ □□□ □□□□□ □□□□□.□□□ □□□□ 5 ~ 2 □□ □□□□□ □□□ □□□□□□□ □□□□□□□□ :□

□□□ :□
1 :□pc .□□□□□□□□ □□□□□

□□□□□□□ □□□□ □□ □□□□ :□
.□□□□□□ □□ □□□□□ □□□□□ □□ □□□□.□□□□□ □□□□ □□□□ □ □□□□□□□ □□□ □ 100 □□□□ □□□□□□ :□
□□□□□ □□□ □□□□□ TUV □ API □ WRAS □ CE □ ISO.
□□ □□□□□□□ □□□□□□ DIN □ ASME □ BS EN □ JIS □ API □ AWWA.

□□□□□□□□□□ □□□□□□ □□□□□ □□□□ □□□□□ □□□□□ □□□ :□
A: RKSfluid □□□□□ □□□□□□ □□□□□□□□ □□□□□ □□□□□□□ 70 □□ □□□□□ □□□□□ 20 □□□□□ □□□□□□
□□ □□□□□□□ □□□□□□□□ □□□□□□□ □□□□□□□ □□□□□.