DESIGN FEATURES

DURABLE

- No-pin connection, 1 pc blow-out proof stem
- DI/CI Nodularity over 95%

ANTI-CORROSION

- Material: Epoxy powder: AkzoNobel, Earth Best!
- Coating Thickness: 200-250μm
- Spraying temp: over 200℃. Doesn't fade, even wipe with diethyl ether

QUALITY STANDARD

- 100% quality test, follow DIN, ASTM, JIS, GB/T, ISO, BS EN, API
- ONLY ONE Manufacturer get CE certification up to DN1800
- 2 years warranty. 15000 times On-off test, 30000 times Destructive experiment

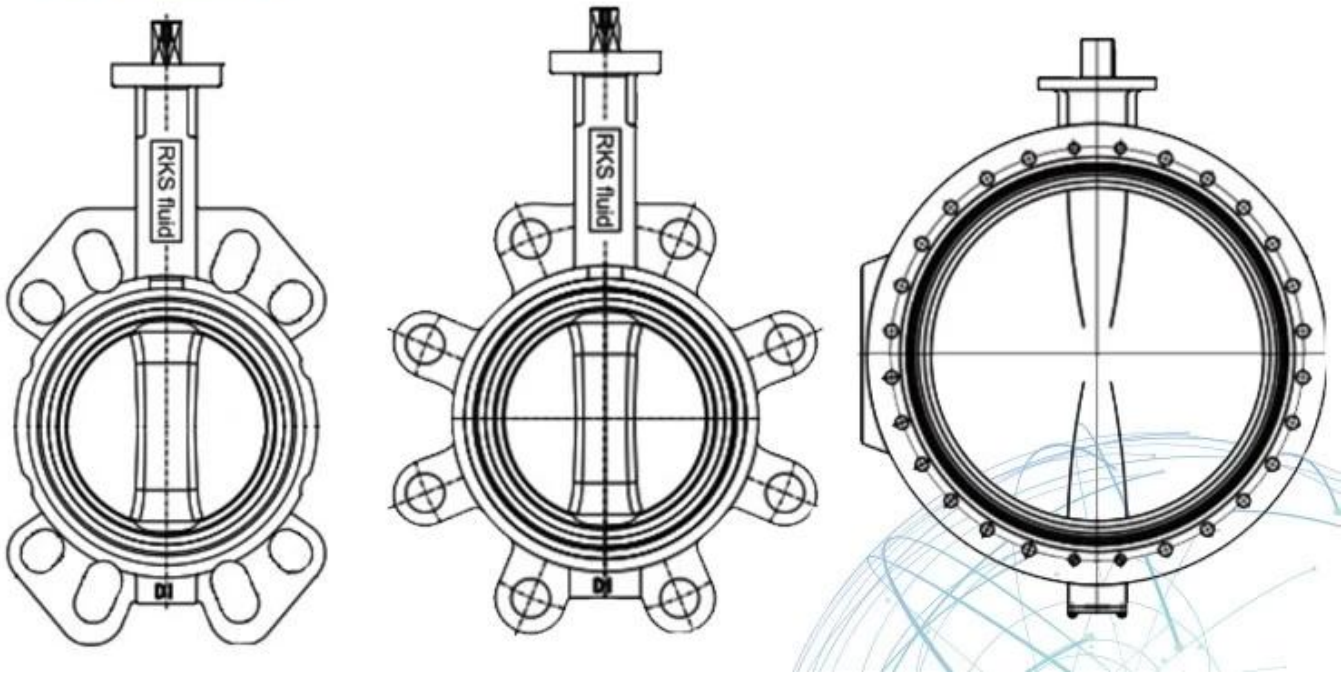

□□□□	DN32 - DN2400 □NPS1 1/4 -NPS96)
□□□□□ □□□□□□□□	PN6 - PN10 - PN16 (150 □□□□□)
□□□□□ □□□□ □□□□	-40 ℃-+120 ℃

□□□□	□□□ □□□ □□□ □□□□□ □□□□□□□ □□□□□□□ □ □□□□□□□□□ □□□□□□.
□□□□□□ □□□□	NBR □ EPDM □ □□□□□□□□□ □ □□□□□□□ □□□□ □ Viton
□□□□□	□□□ □ □□□□□□ □ □□□□□ U □ □□□□□□ □□□

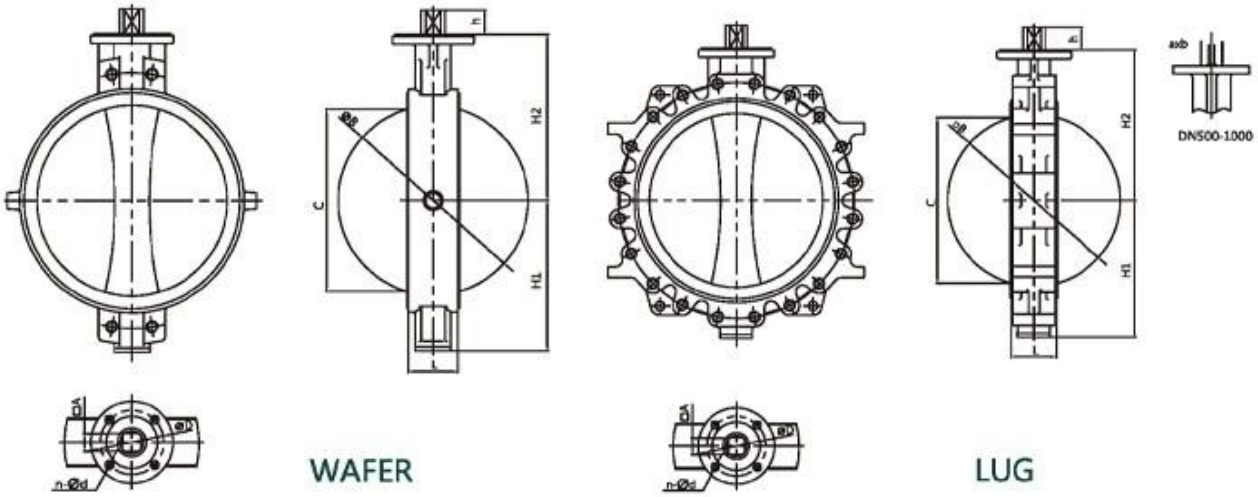

NPS14-NPS40 Wafer/Lug with alignment holes													
Size	L	H1	H2	h	A	ΦB	C	ΦG	a	b	ΦD	n-Φd	IS05211
NPS14	3.07	10.63	11.81	1.42	1.06	Φ13.31	12.95	-	-	-	Φ4.92	4-Φ0.55	F12
NPS16	4.02	11.81	13.58	1.69	1.26	Φ15.35	14.80	-	-	-	Φ5.50	4-Φ0.71	F14
NPS18	4.49	12.99	14.76	1.93	4.42	Φ17.20	16.61	-	-	-	Φ5.50	4-Φ0.71	F14
NPS20	5.00	15.16	16.73	2.56	-	Φ19.09	18.43	Φ2.36	0.71	2.52	Φ6.50	4-Φ0.87	F16
NPS24	6.06	17.24	19.49	2.76	-	Φ23.03	22.24	Φ2.36	0.71	2.52	Φ6.50	4-Φ0.87	F16
NPS28	6.50	20.39	22.44	3.15	-	Φ26.77	25.98	Φ2.76	0.79	2.93	Φ10.00	8-Φ0.71	F25
NPS30	6.50	21.46	24.02	3.15	-	Φ28.74	27.95	Φ2.76	0.79	2.93	Φ10.00	8-Φ0.71	F25
NPS32	7.48	22.32	25.20	3.15	-	Φ30.43	29.49	Φ2.76	0.79	2.93	Φ10.00	8-Φ0.71	F25
NPS36	7.99	25.59	27.56	3.94	-	Φ34.49	33.54	Φ3.15	0.87	3.35	Φ10.00	8-Φ0.71	F25
NPS40	8.50	28.15	29.53	3.94	-	Φ38.43	37.48	Φ3.15	0.87	3.35	Φ11.73	8-Φ0.87	F30

APPLICATION SCENARIO

Industrial water application | Power plant | Sea water desalination | Water treatment | Water supply and drainage | HAVC | Food and drug | Water transport

COMPANY INFORMATION

i مجال العمل: منتجات التحكم في السوائل والتكنولوجيا ومنتجات حماية البيئة.

ii مراكز تصنيع CNC المتقدمة ، وخلايا العمليات المهنية ، ومعدات اللحام الواسعة المدى ، وخطوط التجميع التلقائية والطلاء.

iii الوحدة المرجعية القياسية في الصين ، للمشاركة في تطوير معايير صناعة الصمامات ذات الصلة.

iv أنشأنا مركزًا للبحث والتطوير في هيوستن ، تكساس ، في الولايات المتحدة.

v معيار المنتج: GB ، German Standard ، American Standard ، Tuv CE ، ISO 9001 ، ADWO-2000 ، TS ، PED ، WRC WRAS ، KTW ، API 6D ، API609.

السادس الإنتاج الرئيسي: صمام فراشة، صمام الكرة ، صمام بوابة ، صمام فحص ، صمامات الكرة الأرضية ، تجهيزات الأنابيب ، المحرك اليدوي / الهوائي / الكهربائي ، أجزاء الصمام.

RKSfluid
Proven Technology-Superior Features-Legendary Value

RKSfluid
Proven Technology-Superior Features-Legendary Value

RKSfluid
Proven Technology-Superior Features-Legendary Value

RKSfluid
Proven Technology-Superior Features-Legendary Value

RKSfluid
Proven Technology-Superior Features-Legendary Value

RKSfluid
Proven Technology-Superior Features-Legendary Value

01
21 years of professional experience
02
4 factories
03
Independent research and development team
28 top senior professional researchers
04
2 professional testing centers
05
100% high level ex-factory inspection
06
High quality imported materials
07
2 years quality assurance, repair and replacement

COMPANY QUALIFICATION

COMPANY EXHIBITION

Partners
TALIS
GEMÜ
WATTS
Bray
hawle
amri
BAYARD
AVK
EBRO
KEYSTONE
EMERSON
GIBSON
CAMERON
CMO VALVES
SWISS fluid
SAINT-GOBAIN
KSB
tyco
TTV
SAPAG
haike

Delivery
UPS
DHL
FedEx Express
EMS
TNT
DHL
Payment
PayPal
WESTERN UNION
VISA
ESCROW
MasterCard
HSBC

:□□□□□□□□□□

□□□□□□□□ □□□□ □□□□□□□□□□ □□ □□□ □ □□□□□□ □□□ □□□□□ □□□ □□□ :□
A: .□□□□□□□□□□ □□□□ □ □□□□□□□ □ □□□□□ □ □□□□□□□ □□□□ □ □□□□□□□□ □□□□

□□□□□ □□□□ □ □□□□□□□□ □□□□□ □□□□□ □□ :□
A: □□□□□□□ □□□□□ □□□□□□ □ □□□□□□□□□□ □ □□□□□□□□.RKSfluid □□□□□□□□ □□□□□□□□□ □□□□□ □□□□□□□□
.□□□□□□ □□□ □ □□□□□□ □□□□.□□□□□□□□□□ □□□□□□□

□□□□□□□□□□ □□□□□ □□ □□ :□

□□□□□ :□ RKSfluid .□□□□□□□ □□□□ □□□□□□□□ □□□□ □□ □□□□ □□□□□ □□□□□ □□□

□□□□□□□ □□□□ :□
.□□□□□ □□□ □□□□□ □□□□□.□□□ □□□□ 5 ~ 2 □□ □□□□□ □□□ □□□□□□□ □□□□□□□□ :□

□□ :□
1 :□pc .□□□□□□□□ □□□□□

□□□□□□□ □□□□ □□ □□□□ :□
.□□□□□□ □□ □□□□□ □□□□□ □□ □□□□.□□□□□ □□□□ □□□□ □ □□□□□□□ □□□ □ 100 □□□□ □□□□□□ :□
□□□□□ □□□ □□□□□ TUV □ API □ WRAS □ CE □ ISO.
□□ □□□□□□□ □□□□□□ DIN □ ASME □ BS EN □ JIS □ API □ AWWA.

□□□□□□□□□ □□□□□□ □□□□□ □□□□ □□□□□ □□□□□ □□□ :□
A: RKSfluid ONWER 20 YERSTRESS □□□□□ 70 □□ □□□□□ □□□□□ R&D □□□□□□□ □□□□□ □□□□□ □□□□□□
□□ □□□□□□□ □□□□□□□□ □□□□□□□.