DESIGN FEATURES

DURABLE

- No-pin connection, 1 pc blow-out proof stem
- DI/CI Nodularity over 95%

ANTI-CORROSION

- Material: Epoxy powder: AkzoNobel, Earth Best!
- Coating Thickness: 200-250μm
- Spraying temp: over 200℃. Doesn't fade, even wipe with diethyl ether

QUALITY STANDARD

- 100% quality test, follow DIN, ASTM, JIS, GB/T, ISO, BS EN, API
- ONLY ONE Manufacturer get CE certification up to DN1800
- 2 years warranty. 15000 times On-off test, 30000 times Destructive experiment

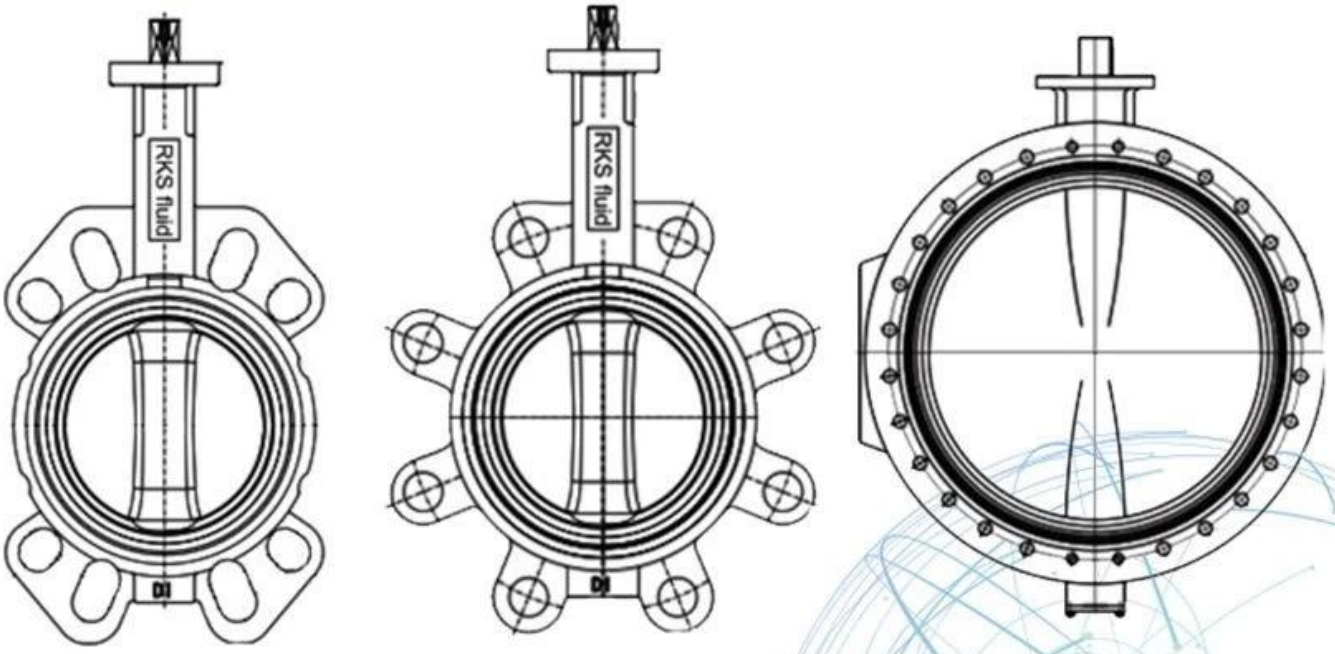

Application Scenario

Our Factory

Company Advantages

01 21 years of professional experience

02 4 factories

03 Independent research and development team
28 top senior professional researchers

04 2 professional testing centers

05 100% high level ex-factory inspection

06 High quality imported materials

07 2 years quality assurance, repair and replacement

I□□□□□□□□□□□□□□□□□□□□□□□□

II□□□CNC□□□□□□□□□□□□□□□□□□□□□□□□□□□□□□□□□□□□

III□□□□□□□□□□□□□□□□□□□□□□□□□□□□

IV□□□□□□□□□□□□□□□□□□□□□□□□□□□□

V□□□□□□GB□□□□□□□□□□□□□TUV CE□ISO 9001□ADWO-2000□TS□PED□WRC WRAS□KTW□API 6D□API609□

□□□/□□/□□□□□□□□□□□□□□

Exhibition Photos

Our Certificates

□□□□

[illegible]

[illegible]

[illegible]

[illegible] RKSfluid[illegible]

[illegible]

[illegible]RKSfluid[illegible]

[illegible]

[illegible]2[illegible]5[illegible]

[illegible]

[illegible]1pc[illegible]

[illegible]

[illegible]100[illegible]2[illegible]

[illegible]TUV[illegible]API[illegible]WRAS[illegible]CE[illegible]ISO[illegible]

[illegible]DIN[illegible]ASME[illegible]BS EN[illegible]JIS[illegible]API[illegible]AWWA[illegible]

[illegible]

[illegible]RKSfluid[illegible]20[illegible]70[illegible]