□□□

1.□□□□□□□□□□□□□□□□□□□□

2.□□□□
□□75□□

3.□□□
□□□□□□□/□□□

4.□□
□□□□□□□□□□□□□□□□□□□□□□□□□10□□□□□□□10□□□□□□1/9□1/6□□□□□□□□□□□□□□□□□□□□□

5.□□□
□□□□□□□□□□□□□□□□□□□□□□□□□□□□□□

6.□□□□
□□□□□90□□□□□□□

7.□□
□□□□□□□□□□□□□□□□□□□□□□□□□□□□□□□□

DESIGN FEATURES

DURABLE

- No-pin connection, 1 pc blow-out proof stem
- DI/CI Nodularity over 95%

ANTI-CORROSION

- Material: Epoxy powder: AkzoNobel, Earth Best!
- Coating Thickness: 200-250μm
- Spraying temp: over 200℃. Doesn't fade, even wipe with diethyl ether

QUALITY STANDARD

- 100% quality test, follow DIN, ASTM, JIS, GB/T, ISO, BS EN, API
- ONLY ONE Manufacturer get CE certification up to DN1800
- 2 years warranty. 15000 times On-off test, 30000 times Destructive experiment

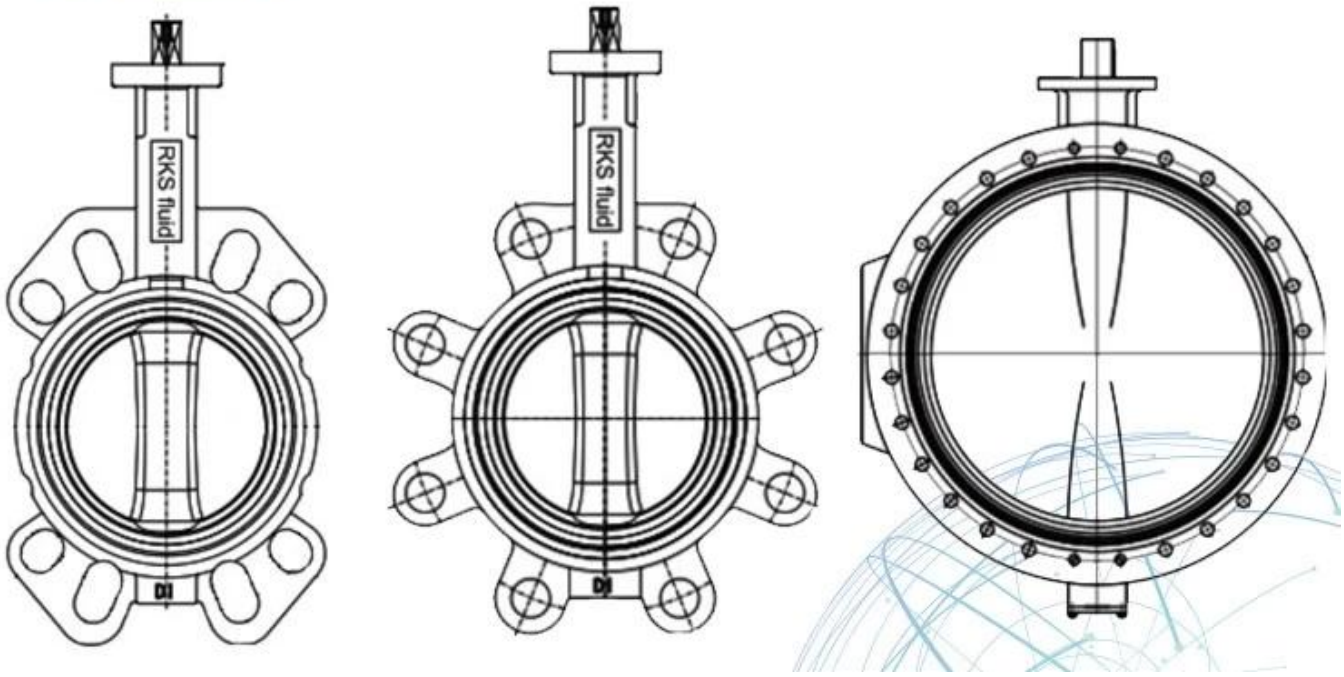

□□	DN32 -DN2400 □NPS1 1/4 -NPS96□
□□□□	PN6 -PN10 -PN16□150□□
□□□□	-40℃-+120℃

□□	□□□□□□□□□□
□□□□	NBR□EPDM□□□□□□□□□Viton
□□	□□□□□□□U□□□□□□□

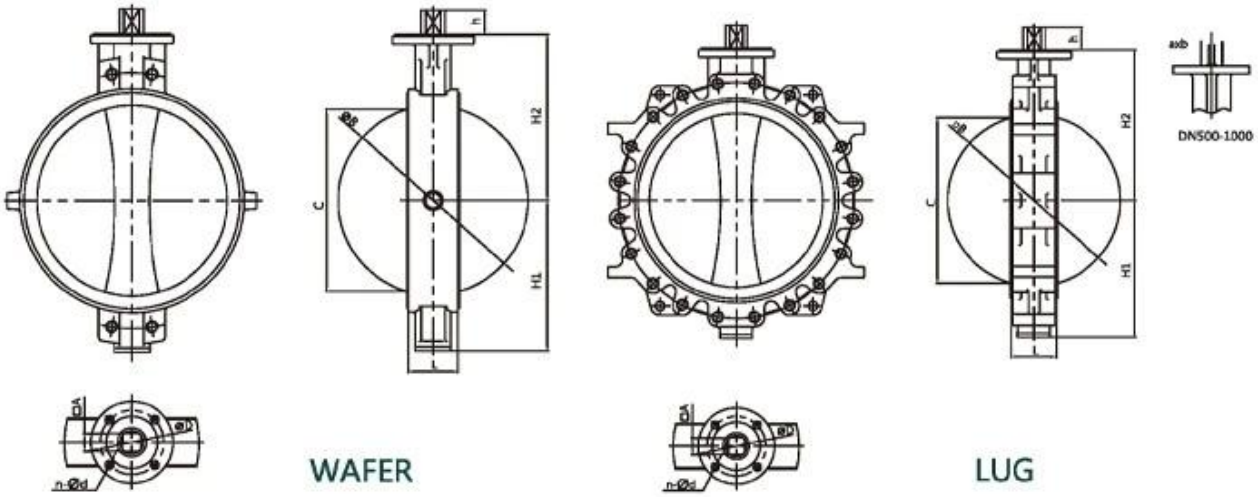

NPS14-NPS40 Wafer/Lug with alignment holes													
Size	L	H1	H2	h	A	ΦB	C	ΦG	a	b	ΦD	n-Φd	IS05211
NPS14	3.07	10.63	11.81	1.42	1.06	Φ13.31	12.95	-	-	-	Φ4.92	4-Φ0.55	F12
NPS16	4.02	11.81	13.58	1.69	1.26	Φ15.35	14.80	-	-	-	Φ5.50	4-Φ0.71	F14
NPS18	4.49	12.99	14.76	1.93	4.42	Φ17.20	16.61	-	-	-	Φ5.50	4-Φ0.71	F14
NPS20	5.00	15.16	16.73	2.56	-	Φ19.09	18.43	Φ2.36	0.71	2.52	Φ6.50	4-Φ0.87	F16
NPS24	6.06	17.24	19.49	2.76	-	Φ23.03	22.24	Φ2.36	0.71	2.52	Φ6.50	4-Φ0.87	F16
NPS28	6.50	20.39	22.44	3.15	-	Φ26.77	25.98	Φ2.76	0.79	2.93	Φ10.00	8-Φ0.71	F25
NPS30	6.50	21.46	24.02	3.15	-	Φ28.74	27.95	Φ2.76	0.79	2.93	Φ10.00	8-Φ0.71	F25
NPS32	7.48	22.32	25.20	3.15	-	Φ30.43	29.49	Φ2.76	0.79	2.93	Φ10.00	8-Φ0.71	F25
NPS36	7.99	25.59	27.56	3.94	-	Φ34.49	33.54	Φ3.15	0.87	3.35	Φ10.00	8-Φ0.71	F25
NPS40	8.50	28.15	29.53	3.94	-	Φ38.43	37.48	Φ3.15	0.87	3.35	Φ11.73	8-Φ0.87	F30

APPLICATION SCENARIO

Industrial water application | Power plant | Sea water desalination | Water treatment | Water supply and drainage | HAVC | Food and drug | Water transport

COMPANY INFORMATION

i[illegible]

ii[illegible]CNC[illegible]

iii[illegible]

iv[illegible]

v[illegible]GB[illegible]TUV CE[illegible]ISO 9001[illegible]ADWO-2000[illegible]TS[illegible]PED[illegible]WRC WRAS[illegible]KTW[illegible]KTW[illegible]API 6D[illegible]API609[illegible]

VI[illegible] [illegible][illegible] /[illegible] /[illegible]

RKSfluid
Proven Technology-Superior Features-Legendary Value

RKSfluid
Proven Technology-Superior Features-Legendary Value

RKSfluid
Proven Technology-Superior Features-Legendary Value

RKSfluid
Proven Technology-Superior Features-Legendary Value

RKSfluid
Proven Technology-Superior Features-Legendary Value

RKSfluid
Proven Technology-Superior Features-Legendary Value

01
21 years of professional experience
02
4 factories
03
Independent research and development team
28 top senior professional researchers
04
2 professional testing centers
05
100% high level ex-factory inspection
06
High quality imported materials
07
2 years quality assurance, repair and replacement

COMPANY QUALIFICATION

COMPANY EXHIBITION

□□□□□

□□□□□□□□□□□□□□□□□□□□
□□□□□□□□□□□□□□□□□□□□□□□□

□□□□□□□□□□□□□□□□□□□
□□□□□□□□hrdraulic□□□□□□RKSfluid□□□□□□□□□□□□□□□□□□□□□

□□□□□□□□□□□□□
□□RKSfluid□□□□□□□□□□□□□□□□

□□□□□□□□

□□□□□□□2□5□□□□□□□□□□□□□□□□□□□□□□□

□□□□

□□□□□□□1□□

□□□□□□□□□□

□□□□□100□□□□□□□2□□□□□□□□□□□□□□□

□□□□□TUV□API□WRAS□CE□ISO□□□

□□□□DIN□ASME□BS EN□JIS□API□AWWA□

□□□□□□□□□□□□□□□□□□□

□□RKSfluid□□20□□□□□□□70□□□□□□□□□□□□□□□□□□□□□□□□□