DESIGN FEATURES

- **Elastic** stainless steel sealing ring, **"0" leakage**
- **Fireproof** structural design, **blow-out proof** stems
- **Auto** welding **plasma powder** surfacing valve seat
- **Hollow** design, **reduces** flow resistance
- Interchangeable **DSS entity seal / multiple-piece stainless and graphite seal**
- **ISO5211** Mounting platform, simple connection

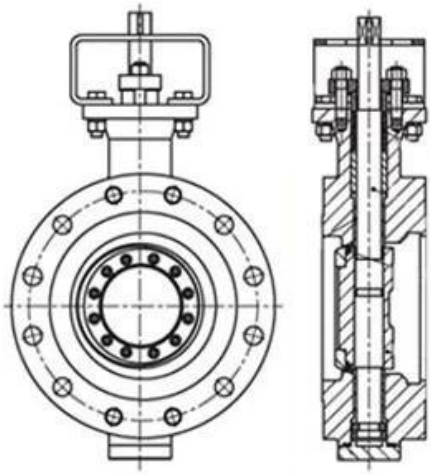

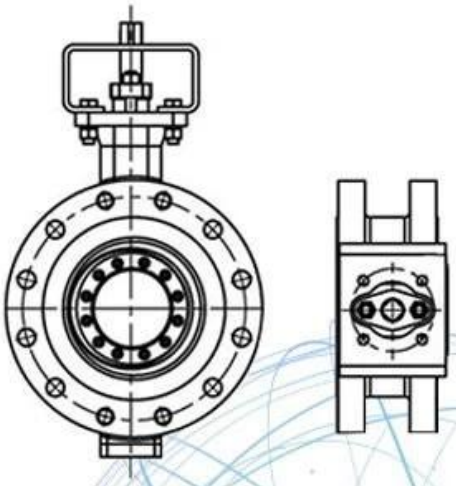

Application Scenario

Our Factory

i□□□□□□□□□□□□□□□□□□□□□□□□□□

ii□□CNC□□□□□□□□□□□□□□□□□□□□□□□□□□□□□□□□□□□□

iii□□□□□□□□□□□□□□□□□□□□□□□□□□

iv□□□□□□□□□□□□□□□□□□□□□□□□□□□

v□□□□□GB□□□□□□□□□□□□TUV CE□ISO 9001□ADWO-2000□TS□PED□WRC WRAS□KTW□KTW□API 6D□API609□

VI□□□□□□□□□□□□□□□□□□□□□□□□□□□□□□ /□□ /□□□□□□□□□□

Exhibition Photos
RKSfluid
RKSfluid®
RKSfluid®
RKSfluid®

Our Certificates
Real
Certificate
Zertifikat
WRAS
CERTIFICATE

□□□□

[illegible]
[illegible]

[illegible]
[illegible]hrdraulic[illegible] RKSfluid[illegible]

[illegible]
[illegible]RKSfluid[illegible]

[illegible]
[illegible]2[illegible]5[illegible]

[illegible]
[illegible]1[illegible]

[illegible]
[illegible]100[illegible]2[illegible]
[illegible]TUV[illegible]API[illegible]WRAS[illegible]CE[illegible]ISO[illegible]
[illegible]DIN[illegible]ASME[illegible]BS EN[illegible]JIS[illegible]API[illegible]AWWA[illegible]

[illegible]
[illegible]RKSfluid[illegible]20[illegible]70[illegible]