RKSfluid®
A key Valve in Flow Control
Butterfly Valve
Ball Valve
Gate Valve
Globe Valve
Check Valve
Pipe Fittings

DESIGN FEATURES

- **Elastic** stainless steel sealing ring, **"0" leakage**
- **Fireproof** structural design, **blow-out proof** stems
- **Auto** welding **plasma powder** surfacing valve seat
- **Hollow** design, **reduces** flow resistance
- Interchangeable **DSS entity seal / multiple-piece stainless and graphite seal**
- **ISO5211** Mounting platform, simple connection

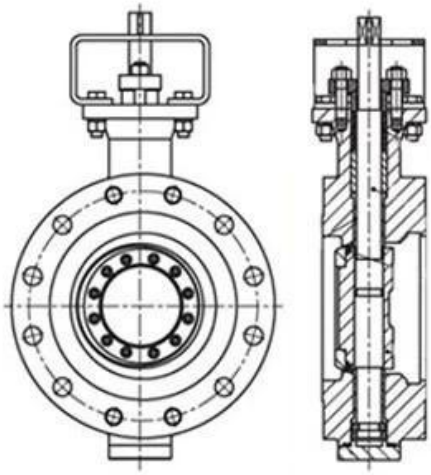

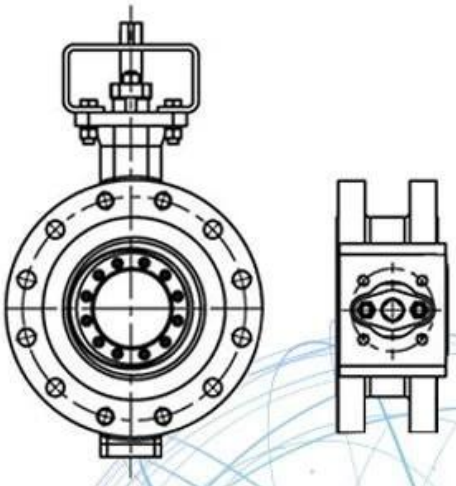

Application Scenario

Our Factory

i□□□□□□□□□□□□□□□□□□□□□□□□□□

ii□□CNC□□□□□□□□□□□□□□□□□□□□□□□□□□□□□□□□□□□□

iii□□□□□□□□□□□□□□□□□□□□□□□□□□

iv□□□□□□□□□□□□□□□□□□□□□□□□□□□

v□□□□□GB□□□□□□□□□□□□TUV CE□ISO 9001□ADWO-2000□TS□PED□WRC WRAS□KTW□KTW□API 6D□API609□

VI□□ /□□ /□□□□□□□□□□□□□

Exhibition Photos
RKSfluid

Our Certificates
Real
Certificate
Zertifikat
WRAS
CERTIFICATE

□□□□

□□□□□□□□□□□□□□□□□□□□
□□□□□□□□□□□□□□□□□□□□□□□

□□□□□□□□□□□□□□□□□□
□□□□□□□□hrdraulic□□□□□□ RKSfluid□□□□□□□□□□□□□□□□□□□□□

□□□□□□□□□□□□
□□RKSfluid□□□□□□□□□□□□□□□

□□□□□□□□
□□□□□□□2□5□□□□□□□□□□□□□□□□□□□□□□□□

□□□
□□□□□□□□1□□

□□□□□□□□□□
□□□□□100□□□□□□2□□□□□□□□□□□□□□□
□□□□□TUV□API□WRAS□CE□ISO□□□
□□□□DIN□ASME□BS EN□JIS□API□AWWA□

□□□□□□□□□□□□□□□□□□□□
□□RKSfluid□□20□□□□□□□70□□□□□□□□□□□□□□□□□□□□□□□□□□