DESIGN FEATURES

DURABLE

- No-pin connection,1 pc blow-out proof stem
- DI/CI Nodularity over 95%

ANTI-CORROSION

- Material: Epoxy powder: AkzoNobel Earth Best!
- Coating Thickness:200-250μm
- Spraying temp: over 200°C. Doesn't fade, even wipe with diethyl ether

QUALITY STANDARD

- 100% quality test, follow DIN, ASTM, JIS, GB/T, ISO, BS EN, API
- ONLY ONE Manufacturer get CE certification up to DN1800
- 2 years warranty.15000 times On-off test,30000 times Destructive experiment

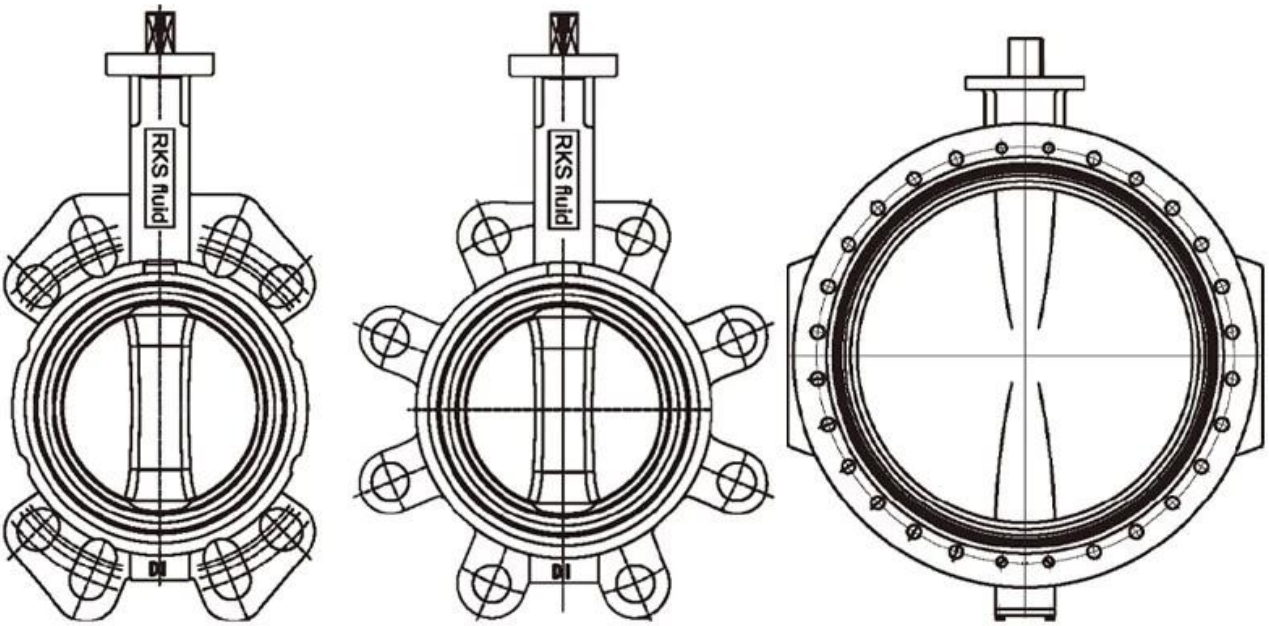

APPLICATION SCENARIO

Industrial water application | Power plant | Sea water desalination | Water treatment | Water supply and drainage | HAVC | Food and drug | Water transport

COMPANY FACTORY

COMPANY INFORMATION

i[illegible]

ii[illegible]CNC[illegible]

iii[illegible]

iv[illegible]

v[illegible]GB[illegible]TUV CE[illegible]ISO 9001[illegible]ADWO-2000[illegible]TS[illegible]PED[illegible]WRC WRAS[illegible]KTW[illegible]KTW[illegible]API 6D[illegible]API609[illegible]

VI[illegible] [illegible][illegible] /[illegible] /[illegible]

01 21 years of professional experience

02 4 factories

03 Independent research and development team
28 top senior professional researchers

04 2 professional testing centers

05 100% high level ex-factory inspection

06 High quality imported materials

07 2 years quality assurance, repair and replacement

COMPANY QUALIFICATION

□□□□□

□□□□□□□□□□□□□□□□□□□
□□□□□□□□□□□□□□□□□□□□□□

□□□□□□□□□□□□□□□□□
□□□□□□□□hrdraulic□□□□□□ RKSfluid□□□□□□□□□□□□□□□□□□□□

□□□□□□□□□□□□
□□RKSfluid□□□□□□□□□□□□□□□

□□□□□□□□
□□□□□□□2□5□□□□□□□□□□□□□□□□□□□□□□□

□□□
□□□□□□□1□□

□□□□□□□□□□
□□□□□100□□□□□□2□□□□□□□□□□□□□□□
□□□□□TUV□API□WRAS□CE□ISO□□□
□□□□DIN□ASME□BS EN□JIS□API□AWWA□

□□□□□□□□□□□□□□□□□□□
□□RKSfluid□□20□□□□□□□70□□□□□□□□□□□□□□□□□□□□□□□□□