# DESIGN FEATURES

This series of butterfly valves are used for industrial pipelines, as bi-directional open and close and regulation devices, the adjustment range is from 40°C-90°C full open.Suitable temperature≥ 80°C

## Features

- Size range DN100-1200mm
- Standard-ISO/BS/DIN/AWWA/API
- Tests Standard-BS EN 12266-1
- Body-Ductile Iron/Cast Iron/Stainless Steel /WCB
- Body Ring-SS420/SS304/SS316
- Disc Ring-EPDM
- Shaft-SS420/SS431/SS316
- Fusion bonded epoxy coating-Min 300 Microns

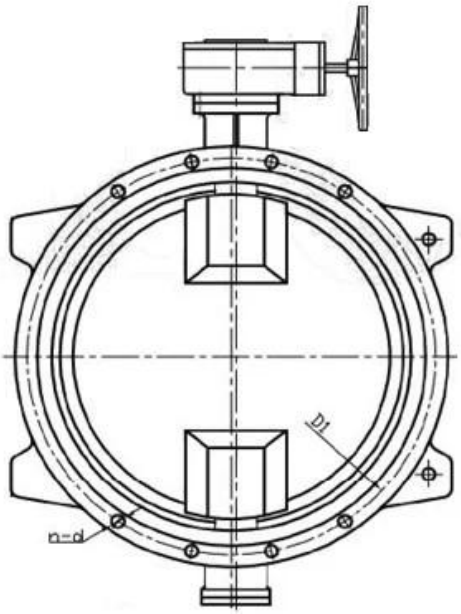


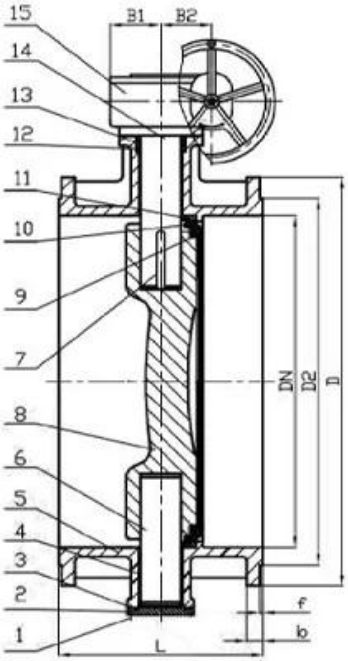

## APPLICATION SCENARIO

Industrial water application | Power plant | Sea water desalination | Water treatment | Water supply and drainage | HAVC | Food and drug | Water transport

## COMPANY FACTORY

# COMPANY INFORMATION

i□□□□□□□□□□□□□□□□□□□□□□

ii□□CNC□□□□□□□□□□□□□□□□□□□□□□□□□□□□□

iii□□□□□□□□□□□□□□□□□□□□□□□

iv□□□□□□□□□□□□□□□□□□□□□□□□

v□□□□GB□□□□□□□□□TUV CE□ISO 9001□ADWO-2000□TS□PED□WRC WRAS□KTW□KTW□API 6D□API609□

VI□□□□ □□□□□□□□□□□□□□□□□□□□□ /□□ /□□□□□□□□

01 21 years of professional experience

02 4 factories

03 Independent research and development team
28 top senior professional researchers

04 2 professional testing centers

05 100% high level ex-factory inspection

06 High quality imported materials

07 2 years quality assurance, repair and replacement

## COMPANY QUALIFICATION

## COMPANY EXHIBITION

# □□□□□

□□□□□□□□□□□□□□□□□□□
□□□□□□□□□□□□□□□□□□□□□□

□□□□□□□□□□□□□□□□□
□□□□□□□□hrdraulic□□□□□□ RKSfluid□□□□□□□□□□□□□□□□□□□□

□□□□□□□□□□□□
□□RKSfluid□□□□□□□□□□□□□□□

□□□□□□□□
□□□□□□□2□5□□□□□□□□□□□□□□□□□□□□□□□

□□□
□□□□□□□1□□

□□□□□□□□□□
□□□□□100□□□□□□2□□□□□□□□□□□□□□□
□□□□□TUV□API□WRAS□CE□ISO□□□
□□□□DIN□ASME□BS EN□JIS□API□AWWA□

□□□□□□□□□□□□□□□□□□□
□□RKSfluid□□20□□□□□□□70□□□□□□□□□□□□□□□□□□□□□□□□□