# RKSfluid®

# RKSfluid®

# RKSfluid®

# RKSfluid®

# RKSfluid®

# DESIGN FEATURES

## DURABLE

- No-pin connection, 1 pc blow-out proof stem
- DI/CI Nodularity over 95%

## ANTI-CORROSION

- Material: Epoxy powder: AkzoNobel, Earth Best!
- Coating Thickness: 200-250μm
- Spraying temp: over 200℃. Doesn't fade, even wipe with diethyl ether

## QUALITY STANDARD

- 100% quality test, follow DIN, ASTM, JIS, GB/T, ISO, BS EN, API
- ONLY ONE Manufacturer get CE certification up to DN1800
- 2 years warranty. 15000 times On-off test, 30000 times Destructive experiment

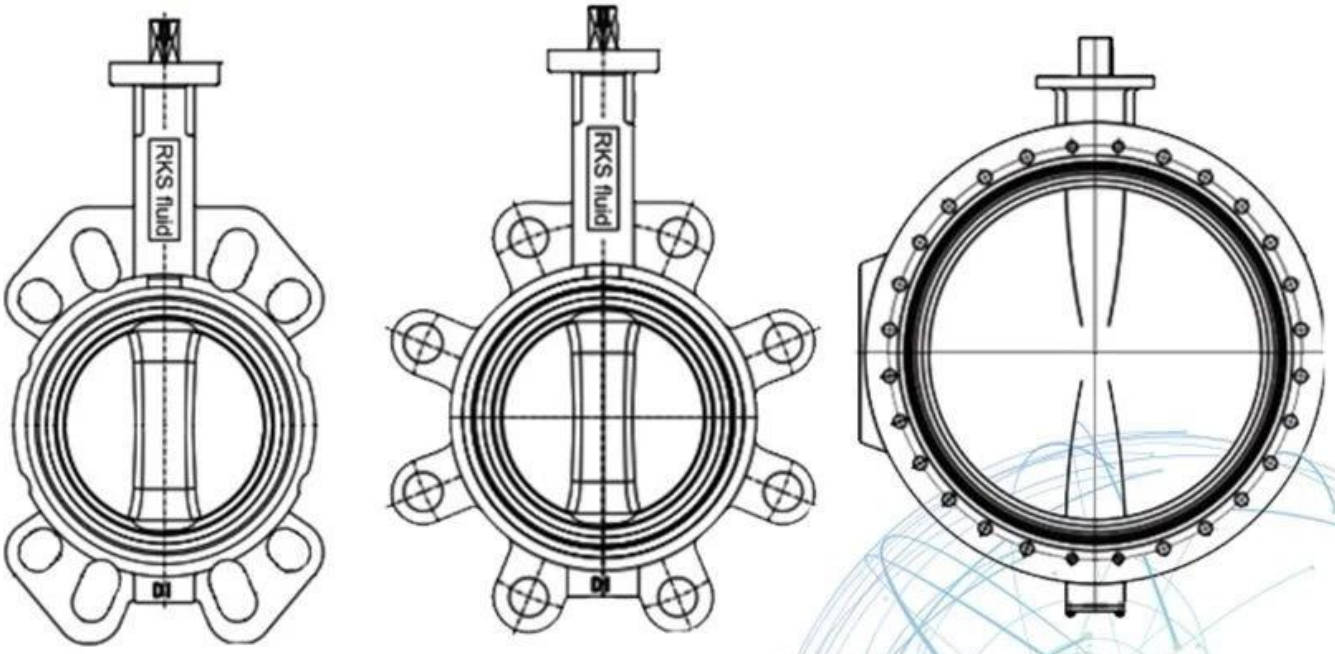


## Application Scenario

## Our Factory

RKSfluid[illegible]1997[illegible]
[illegible]
[illegible]CNC[illegible]
[illegible]
[illegible]
[illegible]
[illegible]
[illegible]RKS[illegible]
[illegible]
[illegible]GB[illegible]ISO[illegible]TUV[illegible]CE[illegible]ADWO- 2000[illegible]
ISO9001[illegible]TS[illegible]API[illegible]
[illegible]
[illegible]
[illegible]
[illegible]“[illegible]”[illegible]
[illegible]

Ⅰ[illegible]

Ⅱ[illegible]CNC[illegible]

Ⅲ[illegible]

Ⅳ[illegible]

V[illegible]GB[illegible]TUV CE[illegible]ISO 9001[illegible]ADWO-2000[illegible]TS[illegible]PED[illegible]WRC

WRAS□KTW□API 6D□API609□

□□□□□□□□□□□□□□□□□□□□□□□□□□□□□□□□□□□□□/□□/□□□□□□□□□□□□□