RKSfluid®

RKSfluid®

RKSfluid®

RKSfluid®

RKSfluid®

RKSfluid®

RKSfluid®

RKSfluid®

DESIGN FEATURES

DURABLE

- No-pin connection, 1 pc blow-out proof stem
- DI/CI Nodularity over 95%

ANTI-CORROSION

- Material: Epoxy powder: AkzoNobel, Earth Best!
- Coating Thickness: 200-250μm
- Spraying temp: over 200℃. Doesn't fade, even wipe with diethyl ether

QUALITY STANDARD

- 100% quality test, follow DIN, ASTM, JIS, GB/T, ISO, BS EN, API
- ONLY ONE Manufacturer get CE certification up to DN1800
- 2 years warranty. 15000 times On-off test, 30000 times Destructive experiment

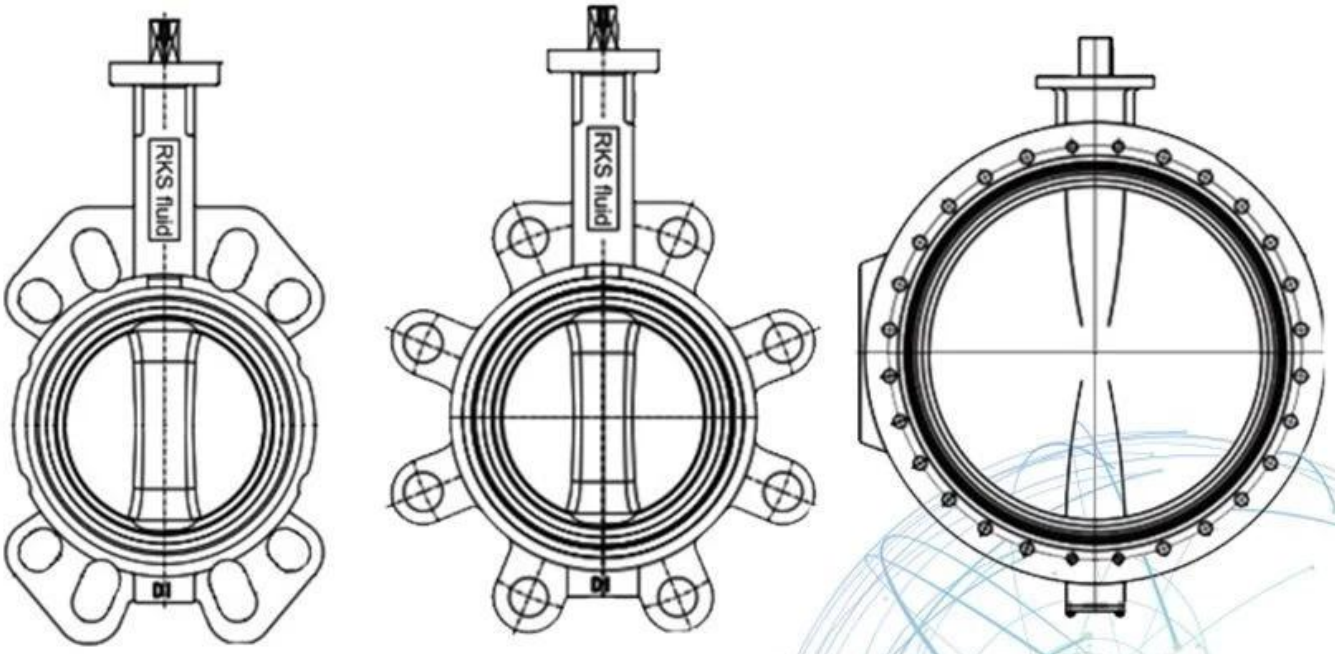

Application Scenario

RKSfluid□□□1997□□□□□□□□□□□□□□□□□□
□□□□□□□□□□□□□□□□□□
□□□□CNC□□□□□□□□□□□□□□□□
□□□□□□□□□□□□□□□□□□□□□□□□□□
□□□□□□□□□□□□□□□□□□□□□□□□□□□□□□□
□□□□□□□□□□□□□□□□□□
□□□□□□□□□□□□□□□□□□
□□□□□□□□□□□□□□□RKS□□□
□□□□□□□□□□□□□□□□□□□□□□□□□□□□□□□□□□
□□□□□GB□ISO□□□□□□□□□□□□TUV□CE□ADWO- 2000□□□
ISO9001□TS□API□□□□□□□□□□□□□□□□□□
□□□□□□□□□□□□□□□□□□□
□□□□□□□□□□□□□□□□□□□□□□□□□□□□□□□
□□□□□□□□□□□□□□□□□□□□□□□□
□□□□“□□□□□□□□□□□□□□□□□”□□□□□
□□□□□□□□□□□□□□□□□□□□□
I□□□□□□□□□□□□□□□□□□□□

Ⅱ□□□CNC□□□□□□□□□□□□□□□□□□□□□□□□□□□

Ⅲ□□□□□□□□□□□□□□□□□□□□□□□

Ⅳ□□□□□□□□□□□□□□□□□□□□□

V□□□□□GB□□□□□□□□□□□TUV CE□ISO 9001□ADWO-2000□TS□PED□WRC

WRAS□KTW□API 6D□API609□

□□□□□□□□□□□□□□□□□□□□□□□□□□□□□□□□□□□□□/□□/□□□□□□□□□□□□□