DESIGN FEATURES

DURABLE

- **1 piece** non-welded **PFA** molded **DSS** Disc stem
- **Precision casting** WCB/CF8M Bodies

TRIPLE SEAL

- **Triple Seal**: Spring loaded Mechanical seal, Radial Lip Seal, FPM
- China **ONLY ONE** Manufacturer **400Mpa Isostatic pressing** PTFE seat, **consistent density**

ANTI-CORROSION

- **Material: Epoxy powder: AkzoNobel, Earth Best!**
- Coating Thickness: **200-250μm**
- Spraying temp: over **200℃**. Doesn't fade, even wipe with diethyl ether

QUALITY STANDARD

- **100% quality test**, follow DIN, ASTM, JIS, GB/T, ISO, BS EN, API
- **ONLY ONE** Manufacturer get **CE** certification up to **DN1800**
- **2 years** warranty. **15000** times On-off test, **30000** times Destructive experiment

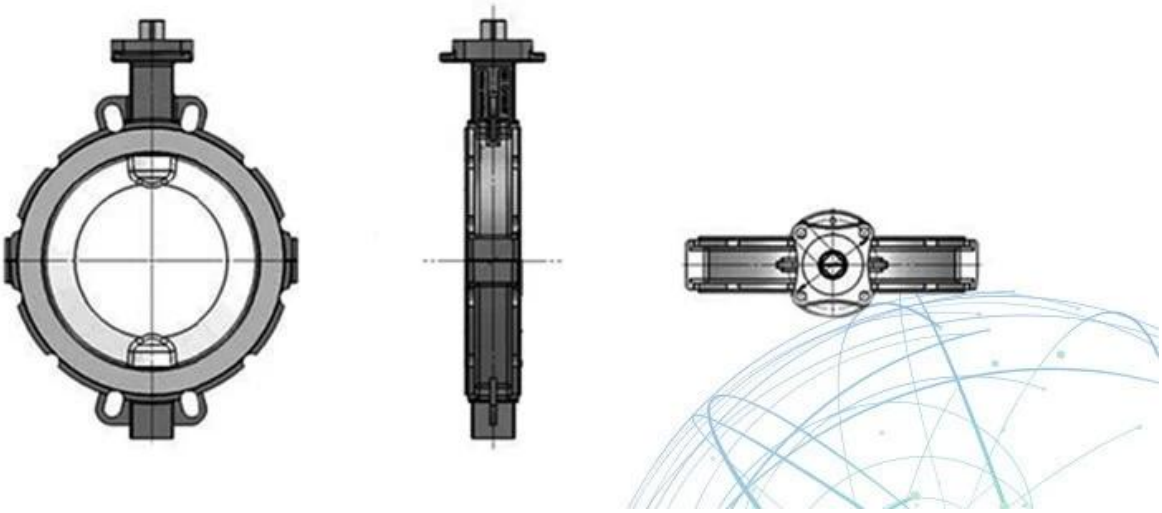

APPLICATION SCENARIO

Industrial water application | Nuclear plant | Petroleum | Steel | Wastewater treatment | Acid-base | Food | Irrigation

Our Factory

i□□□□□□□□□□□□□□□□□□□□□□□

ii□□□□□□□□□□□□□□□□□□□□□□□□□□□□□□□□□□□□□

iii□□□□□□□□□□□□□□□□□□□□□□□

iv□□□□□□□□□□□□□□□□□□□□□□□□□□

v□□□□□GB□□□□□□□□□□□TUV CE□ISO 9001□ADWO-2000□TS□PED□WRC WRAS□KTW□KTW□API 6D□API609□

VI□□□□□□□□□□□□□□□□□□□□□□□□□□□□□□/□□/□□□□□□□□□□

Exhibition Photos
RKSfluid
RKSfluid®

Our Certificates
Real
Certificate
Zertifikat
WRAS
CERTIFICATE

□□□□

□□□□□□□□□□□□□□□□□□□

[illegible]

[illegible]
[illegible] RKSfluid[illegible]

[illegible]
[illegible]RKSfluid[illegible]

[illegible]
[illegible]2[illegible]5[illegible]

[illegible]
[illegible]1 pc[illegible]

[illegible]
[illegible]100[illegible]2[illegible]
[illegible]TUV[illegible]API[illegible]WRAS[illegible]CE[illegible]ISO[illegible]
[illegible]DIN[illegible]ASME[illegible]BS EN[illegible]JIS[illegible]API[illegible]AWWA[illegible]

[illegible]
[illegible]RKSfluid[illegible]20[illegible]70[illegible]