## DESIGN FEATURES

### Features

- Use AkzoNobel material.
- Super Anti-corrosion
- Epoxy powder coating 200-250um,
- Baking varnish over 200℃,

| NO. | | |
|---|---|---|
| 1 | Body | GGG50 |
| 2 | Dise | GGG40+EPDM |
| 3 | Wedge nut | C48600 |
| 4 | Stem | SS431 |
| 5 | Bonnet | GT450-10 |
| 6 | Gasket | EPDM |
| 7 | Y-ring | EPDM85-90 |
| 8 | Fix ring | CuZn21Si3/C69300 |
| 9 | Thrust bearing | C69300 |
| 10 | Seal ring | EPDM70 |
| 11 | O ring | NBR |
| 12 | Retainer ring | POM |
| 13 | Bushing ring | POM |
| 14 | Gland | SS431 |
| 15 | Dustproof ring | EPDM85 |
| 16 | Dise core | GGG40 |
| 17 | Bolt | SS316 |

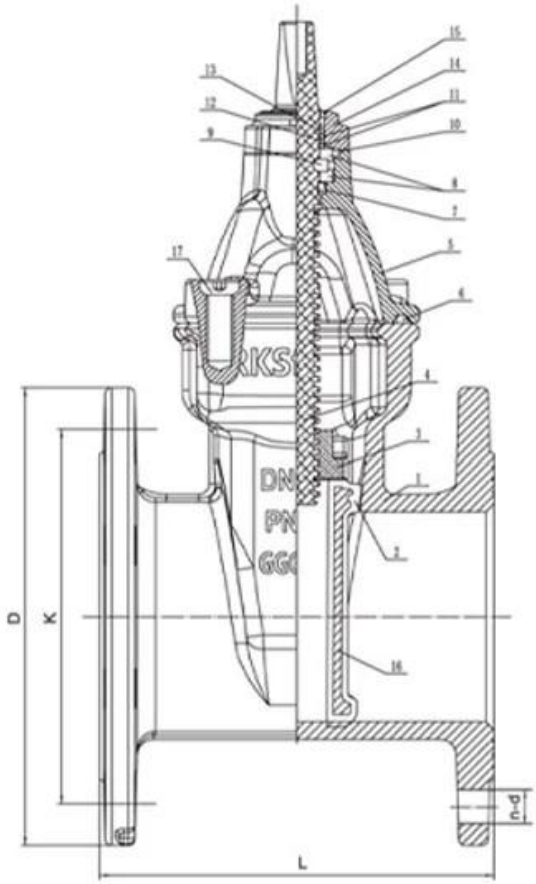

Free wedge nut, **reduces the stem bending forces** and at the same time enables it to be easily replaced.

The more compact new cap, reduces the water retention areas in order **to reduce the risk of bacterial growth**.

One piece stainless steel stem in for **better resistance to axial load and to with stand higher operating torques**.

**Three locking tab** for bayonet system prevents self-dismantling.

Dust guard integrating three O-ring shape, **prohibiting the introduction of foreign** bodies at the stem.

**Male guiding system with composite sliding skate** reduces the wear of the wedge against the body, allowing a smooth functionality and a longer life time of the valve.

**Triple seal at the operating stem** to ensure tightness with the test of time (2500 cycles).

**New male composite sliding skate technology** ensuring a low operating torque even under high differential pressure and preventing damage or corrosion generated by the friction.

## RELATED PRODUCTS

## APPLICATION SCENARIO

Industrial water application | Power plant | Sea water desalination | Water treatment | Water supply and drainage | HAVC | Food and drug | Water transport

## COMPANY FACTORY

# COMPANY INFORMATION

i□□□□□□□□□□□□□□□□□□□□□□

ii□□CNC□□□□□□□□□□□□□□□□□□□□□□□□□□□□□

iii□□□□□□□□□□□□□□□□□□□□□□□

iv□□□□□□□□□□□□□□□□□□□□□□□□

v□□□□□GB□□□□□□□□□□□TUV CE□ISO 9001□ADWO-2000□TS□PED□WRC WRAS□KTW□KTW□API 6D□API609□

VI□□□□□□□□□□□□□□□□□□□□□□□□□□□□□□□□ /□□ /□□□□□□□□□□

01 21 years of professional experience

02 4 factories

03 Independent research and development team
28 top senior professional researchers

04 2 professional testing centers

05 100% high level ex-factory inspection

06 High quality imported materials

07 2 years quality assurance, repair and replacement

# COMPANY QUALIFICATION

## COMPANY EXHIBITION

# □□□□

□□□□□□□□□□□□□□□□□□□□□□
□□□□□□□□□□□□□□□□□□□□□□□□□□

□□□□□□□□□□□□□□□□□□□□
□□□□□□□□□□hrdraulic□□□□□□□ RKSfluid□□□□□□□□□□□□□□□□□□□□□□□□□□

□□□□□□□□□□□□□□
□□RKSfluid□□□□□□□□□□□□□□□□□□

□□□□□□□□□
□□□□□□□□2□5□□□□□□□□□□□□□□□□□□□□□□□□□□□□

□□□
□□□□□□□□1□□

□□□□□□□□□□□
□□□□□100□□□□□□□2□□□□□□□□□□□□□□□□□□
□□□□□TUV□API□WRAS□CE□ISO□□□
□□□□DIN□ASME□BS EN□JIS□API□AWWA□

□□□□□□□□□□□□□□□□□□□□□□
□□RKSfluid□□20□□□□□□□□70□□□□□□□□□□□□□□□□□□□□□□□□□□□□□□□□□□□□□□