DESIGN FEATURES

DURABLE

- No-pin connection, 1 pc blow-out proof stem
- DI/CI Nodularity over 95%

ANTI-CORROSION

- Material: Epoxy powder: AkzoNobel, Earth Best!
- Coating Thickness: 200-250μm
- Spraying temp: over 200℃. Doesn't fade, even wipe with diethyl ether

QUALITY STANDARD

- 100% quality test, follow DIN, ASTM, JIS, GB/T, ISO, BS EN, API
- ONLY ONE Manufacturer get CE certification up to DN1800
- 2 years warranty. 15000 times On-off test, 30000 times Destructive experiment

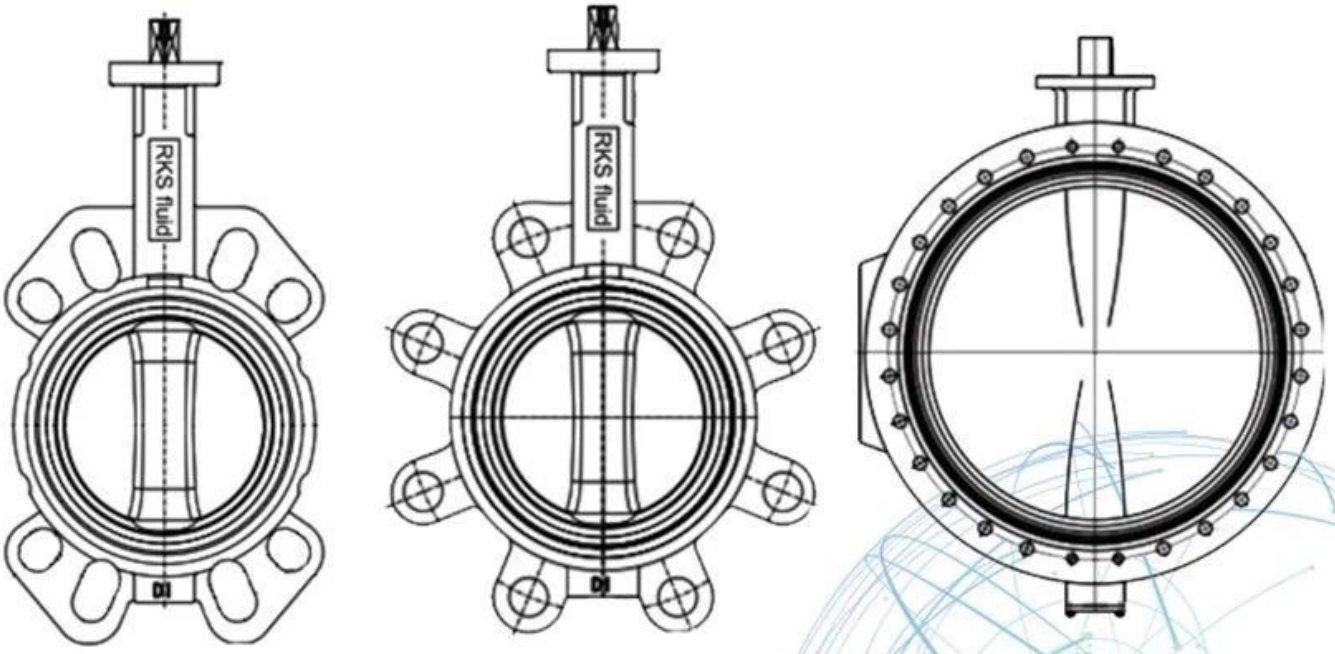

Application Scenario

Our Factory

Company Advantages

01 21 years of professional experience

02 4 factories

03 Independent research and development team
28 top senior professional researchers

04 2 professional testing centers

05 100% high level ex-factory inspection

06 High quality imported materials

07 2 years quality assurance, repair and replacement

Ⅰ□□□□□□□□□□□□□□□□□□□□□□

Ⅱ□□□CNC□□□□□□□□□□□□□□□□□□□□□□□□□□□□□□

Ⅲ□□□□□□□□□□□□□□□□□□□□□□□□□

Ⅳ□□□□□□□□□□□□□□□□□□□□□□□

Ⅴ□□□□GB□□□□□□□□□□□□TUV CE□ISO 9001□ADWO-2000□TS□PED□WRC WRAS□KTW□API 6D□API609□

□□□□□□□□□□□□□□□□□□□□□□□□□□□□□□□□□/□□/□□□□□□□□□□□□

Exhibition Photos

□□□□

□□□□□□□□□□□□□□□□□□□□
□□□□□□□□□□□□□□□□□□□□□□□□□□□□

□□□□□□□□□□□□
□□□□□□□□□□□□□□□□□□ RKSfluid□□□□□□□□□□□□□□□□□□□□□□□□□□□□

□□□□□□□□□□□□□□
□□RKSfluid□□□□□□□□□□□□□□□□□□□□

□□□□□□□□
□□□□□□□□2□5□□□□□□□□□□□□□□□□□□□□□

□□□□□
□□□□□□□1pc□

□□□□□□□□□□
□□□□□□□□100□□□□□□□2□□□□□□□□□□□□□□□□
□□□□□□TUV□API□WRAS□CE□ISO□□□
□□□□□DIN□ASME□BS EN□JIS□API□AWWA□

□□□□□□□□□□□□□□□□□□□□□□

□□RKSfluid□□20□□□□□□□70□□□□□□□□□□□□□□□□□□□□□□□□
□□□□□□□□□□□