DESIGN FEATURES

Features

1.Streamlined: minimum noise

2.Anti-static design

3.Double Block & Bleed

4.Automatic Self-Venting Seats

5.Emergency Protection

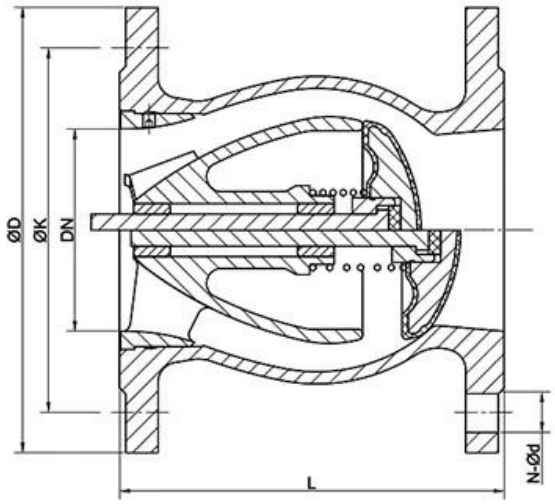

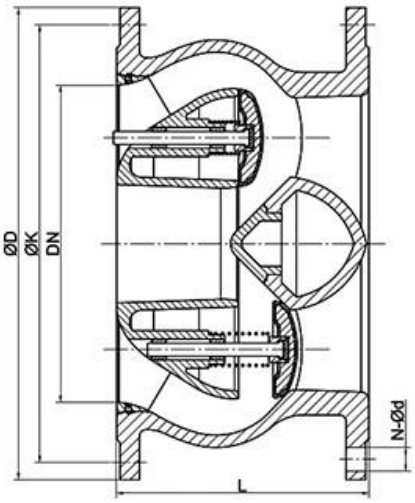

APPLICATION SCENARIO

Industrial water application | Power plant | Sea water desalination | Water treatment | Water supply and drainage | HAVC | Food and drug | Water transport

COMPANY INFORMATION

i[illegible]

ii[illegible]CNC[illegible]

iii[illegible]

iv[illegible]

v[illegible]GB[illegible]TUV CE[illegible]ISO 9001[illegible]ADWO-2000[illegible]TS[illegible]PED[illegible]WRC WRAS[illegible]KTW[illegible]KTW[illegible]API 6D[illegible]API609[illegible]

VI[illegible] /[illegible] /[illegible]

01
21 years of professional experience
02
4 factories
03
Independent research and development team
28 top senior professional researchers
04
2 professional testing centers
05
100% high level ex-factory inspection
06
High quality imported materials
07
2 years quality assurance, repair and replacement

COMPANY QUALIFICATION

COMPANY EXHIBITION

□□□□

□□□□□□□□□□□□□□□□□□□□
□□□□□□□□□□□□□□□□□□□□□□□

□□□□□□□□□□□□□□□□□□
□□□□□□□□hrdraulic□□□□□□ RKSfluid□□□□□□□□□□□□□□□□□□□□□

□□□□□□□□□□□□
□□RKSfluid□□□□□□□□□□□□□□□

□□□□□□□□
□□□□□□□2□5□□□□□□□□□□□□□□□□□□□□□□□□

□□□
□□□□□□□1□□

□□□□□□□□□□
□□□□□100□□□□□□2□□□□□□□□□□□□□□□□
□□□□□TUV□API□WRAS□CE□ISO□□□
□□□□DIN□ASME□BS EN□JIS□API□AWWA□

□□□□□□□□□□□□□□□□□□□□
□□RKSfluid□□20□□□□□□□70□□□□□□□□□□□□□□□□□□□□□□□□□□