- Streamlined, minimum noise
- Backflow velocity only 0.2s, Head loss 0.1bar with 2m/s
- EPDM/NBR Rubber fully coated disc
- Anti-erosion design, Self-adjusting ball
- Self-cleaning stem, Long time smooth operation

## Engineering Projects

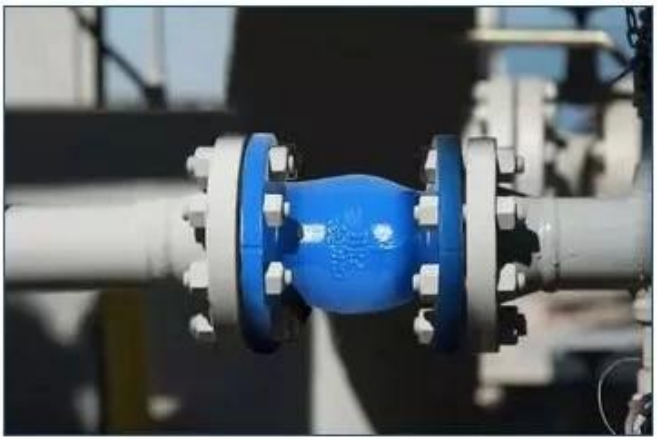

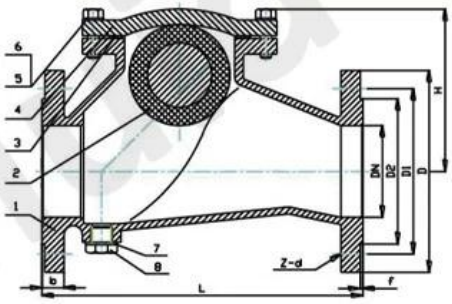


## Ball Check Valve, Flange

| ITEM | PART NAME | MATERIAL |
|---|---|---|
| 1 | Body | Ductile iron |
| 2 | Ball | NBR |
| 3 | Gasket | NBR |
| 4 | Body | Ductile iron |
| 5 | Bolt | SS304 |
| 6 | Washer | SS304 |
| 7 | Washer | Nylon |
| 8 | Plug | SS304 |

| SIZE | DIN 3202 F6 | Flange dimension(EN 1092-2) PN10/PN16 | | |
|---|---|---|---|---|
| DN | L | D | K | n-d |
| DN40/1.5" | 180 | 150 | 110 | 4-ø19 |
| DN50/2" | 200 | 165 | 125 | 4-ø19 |
| DN65/2.5" | 240 | 185 | 145 | 4-ø19 |
| DN80/3" | 260 | 200 | 160 | 8-ø19 |
| DN100/4" | 300 | 220 | 180 | 8-ø19 |
| DN125/5" | 350 | 250 | 210 | 8-ø19 |
| DN150/6" | 400 | 285 | 240 | 8-ø23 |
| DN200/8" | 500 | 340 | 295/295 | 8-ø23/12-ø23 |
| DN250/10" | 600 | 405 | 350/355 | 12-ø23/12-ø28 |
| DN300/12" | 700 | 460 | 400/410 | 12-ø23/12-ø28 |
| DN4O0/16" | 900 | 580 | 515/525 | 16-ø28/16-ø31 |
| DNS00/20" | 1100 | 715 | 620/650 | 20-ø28/20-ø34 |

RKSfluid®

## Product Display

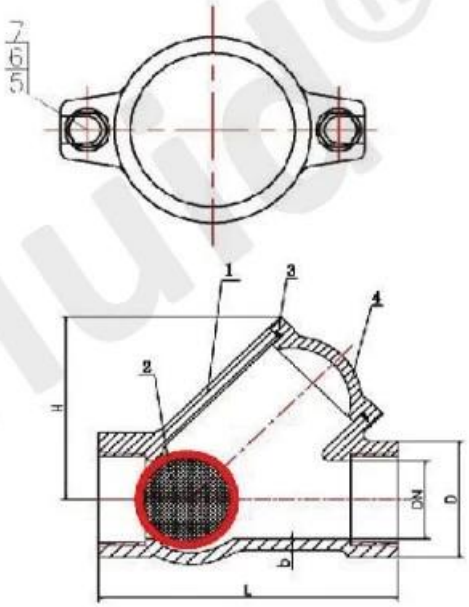


Ball Check Valve, Threaded

| ITEM | PART NAME | MATERIAL |
|---|---|---|
| 1 | Body | Ductile iron |
| 2 | Ball | NBR |
| 3 | O-Ring | NBR |
| 4 | Cover | Ductile iron |
| 5 | Gasket | SS304 |

| SIZE | DIN 3202 F6 | Flange dimension(EN 1092-2) PN10/PN16 | | |
|---|---|---|---|---|
| DN | L | D | H | B |
| DN25 | 135 | 50 | 75 | 6 |
| DN32 | 135 | 50 | 75 | 6 |
| DN40 | 145 | 60 | 93 | 6 |
| DN50 | 175 | 72 | 106 | 7 |
| DN65 | 200 | 90 | 131 | 7 |

RKsfluid®

## Company Advantages

01 21 years of professional experience

02 4 factories

03 Independent research and development team
28 top senior professional researchers

04 2 professional testing centers

05 100% high level ex-factory inspection

06 High quality imported materials

07 2 years quality assurance, repair and replacement

# COMPANY INFORMATION

ii□□CNC□□□□□□□□□□□□□□□□□□□□□□□□□□□□□□

iii□□□□□□□□□□□□□□□□□□□□□□□□

iv□□□□□□□□□□□□□□□□□□□□□□□□□

v□□□□□GB□□□□□□□□□□□TUV CE□ISO 9001□ADWO-2000□TS□PED□WRC WRAS□KTW□KTW□API 6D□API609□

VI□□□□□□□□□□□□□□□□□□□□□□□□□□□□□□□□ /□□ /□□□□□□□□□□

□□□□

□□□□□□□□□□□□□□□□□□□□□□
□□□□□□□□□□□□□□□□□□□□□□□□□□□

□□□□□□□□□□□□□□□□□□□□
□□□□□□□□□hrdraulic□□□□□□□RKSfluid□□□□□□□□□□□□□□□□□□□□□□□□□□□

□□□□□□□□□□□□□□
□□RKSfluid□□□□□□□□□□□□□□□□□□

□□□□□□□□□
□□□□□□□□2□5□□□□□□□□□□□□□□□□□□□□□□□□□□□□

□□□
□□□□□□□□1□□

□□□□□□□□□□□
□□□□□100□□□□□□□2□□□□□□□□□□□□□□□□□□
□□□□□TUV□API□WRAS□CE□ISO□□□
□□□□DIN□ASME□BS EN□JIS□API□AWWA□

□□□□□□□□□□□□□□□□□□□□□□

□□RKSfluid□□20□□□□□□□70□□□□□□□□□□□□□□□□□□□□□□□□□□