RKSfluid®
A key Valve in Flow Control
Butterfly Valve
Ball Valve
Gate Valve
Globe Valve
Check Valve
Pipe Fittings

DESIGN FEATURES

- **Elastic** stainless steel sealing ring, **"0" leakage**
- **Fireproof** structural design, **blow-out proof** stems
- Double-arc incision design: **reduce flow rate** during on-off, **reduce the erosion damage**, long life
- Double seal surface design: **reduce the torque**
- **Scraper structure** design: scratch off ball surface
- **Unique universal joint** design: reduce torque, on-off smoothly, long life

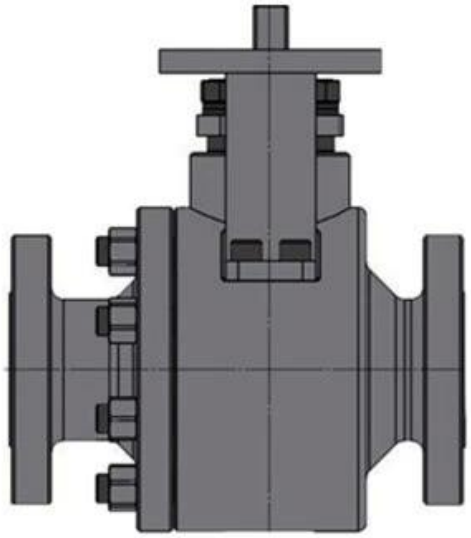

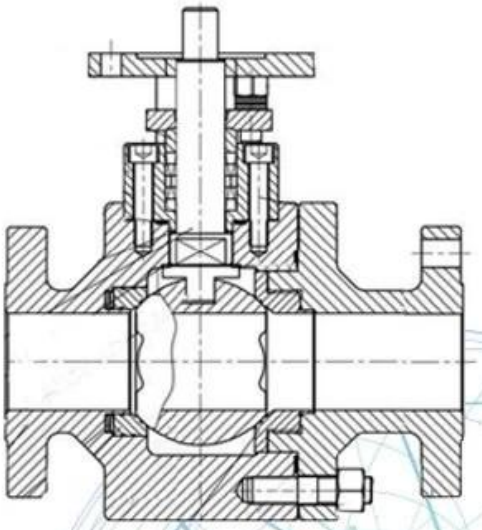

APPLICATION SCENARIO

Industrial water application | Power plant | Petroleum | Steel | Wastewater treatment | Acid-base | Healing drugs | Refined coal

Our Factory

Ⅰ□□□□□□□□□□□□□□□□□□□□

Ⅱ□□□CNC□□□□□□□□□□□□□□□□□□□□□□□□□□□□□□□

Ⅲ□□□□□□□□□□□□□□□□□□□□□□□

Ⅳ□□□□□□□□□□□□□□□□□□□□□

V□□□□□GB□□□□□□□□□□□TUV CE□ISO 9001□ADWO-2000□TS□PED□WRC WRAS□KTW□API 6D□API609□

□□□□□□□□□□□□□□□□□□□□□□□□□□□□□□□□/□□/□□□□□□□□□□□□

Exhibition Photos

Our Certificates

[illegible]

[illegible]
[illegible]

[illegible]
[illegible] RKSfluid[illegible]

[illegible]
[illegible]RKSfluid[illegible]

[illegible]
[illegible]2~5[illegible]

[illegible]MOQ
[illegible]1pc[illegible]

[illegible]
[illegible]100[illegible]2[illegible]
[illegible]TUV[illegible]API[illegible]WRAS[illegible]CE[illegible]ISO[illegible]
[illegible]DIN[illegible]ASME[illegible]BS EN[illegible]JIS[illegible]API[illegible]AWWA[illegible]

[illegible]
[illegible]RKSfluid[illegible]20[illegible]70[illegible]R& D[illegible]