DESIGN FEATURES

DURABLE

- No-pin connection, 1 pc blow-out proof stem
- DI/CI Nodularity over 95%

ANTI-CORROSION

- Material: Epoxy powder: AkzoNobel, Earth Best!
- Coating Thickness: 200-250μm
- Spraying temp: over 200℃. Doesn't fade, even wipe with diethyl ether

QUALITY STANDARD

- 100% quality test, follow DIN, ASTM, JIS, GB/T, ISO, BS EN, API
- ONLY ONE Manufacturer get CE certification up to DN1800
- 2 years warranty. 15000 times On-off test, 30000 times Destructive experiment

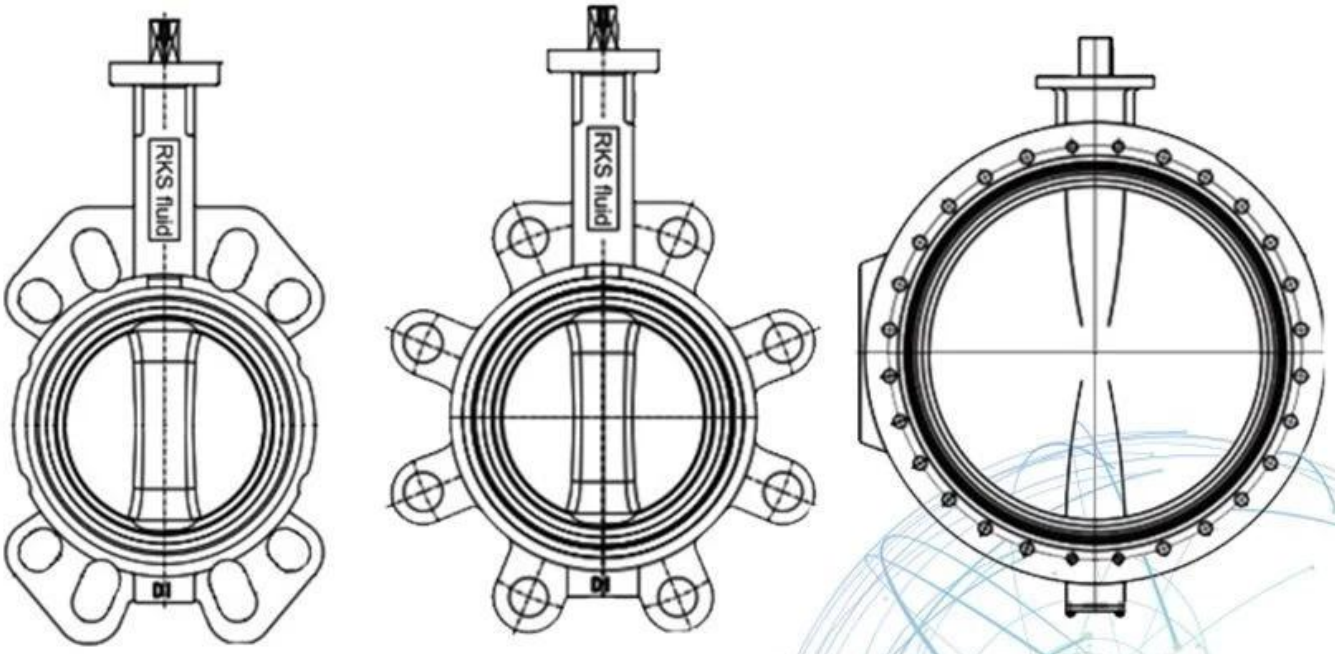

Application Scenario

Company Advantages

- 01 21 years of professional experience
- 02 4 factories
- 03 Independent research and development team
  28 top senior professional researchers
- 04 2 professional testing centers
- 05 100% high level ex-factory inspection
- 06 High quality imported materials
- 07 2 years quality assurance, repair and replacement

Ⅰ[illegible]

Ⅱ[illegible]

Ⅲ[illegible]

iv[illegible]

v[illegible]GB[illegible]TUV CE[illegible]ISO 9001[illegible]ADWO-2000[illegible]TS[illegible]PED[illegible]WRC WRA[illegible]KTW[illegible]API 6D[illegible]API609[illegible]

VI[illegible] [illegible][illegible]/[illegible]/[illegible]

□□□□

□□□□□□□□□□□□□□□□□□□□□□
- □□□□□□□□□□□□□□□□□□□□□□□□□□□□□

□□□□□□□□□□□□□□□□□□
- □□□□□□□□□Hrdraulic□□□□□ RKSfluid□□□□□□□□□□□□□□□□□□□□□□□□□□□□

□□□□□□□□□□□□□
□□RKSfluid□□□□□□□□□□□□□□□□□□□□

□□□□□□□□□
□□□□□□□□2□5□□□□□□□□□□□□□□□□□□□□□□□

□□Moq.
A□□□□□□□1PC□

□□□□□□□□□□
- □□□□□□100□□□□□□□□□2□□□□□□□□□□□□□□□
□□□□□□TUV□API□WRA□CE□ISO□□□
□□□□□DIN□ASME□BS EN□JIS□API□AWWA□

□□□□□□□□□□□□□□□□□

□□RKSfluid□□20□□□□□70□□□□□□□□□□□□□□□□□□□□□□□□□□