RKSfluid®
A key Valve in Flow Control
Butterfly Valve
Ball Valve
Gate Valve
Globe Valve
Check Valve
Pipe Fittings

DESIGN FEATURES

DURABLE

- **1 piece** non-welded **PFA** molded **DSS** Disc stem
- **Precision casting** WCB/CF8M Bodies

TRIPLE SEAL

- **Triple Seal**: Spring loaded Mechanical seal, Radial Lip Seal, FPM
- China **ONLY ONE** Manufacturer **400Mpa Isostatic pressing** PTFE seat, **consistent density**

ANTI-CORROSION

- **Material: Epoxy powder: AkzoNobel, Earth Best!**
- Coating Thickness: **200-250μm**
- Spraying temp: over **200℃**. Doesn't fade, even wipe with diethyl ether

QUALITY STANDARD

- **100% quality test**, follow DIN, ASTM, JIS, GB/T, ISO, BS EN, API
- **ONLY ONE** Manufacturer get **CE** certification up to **DN1800**
- **2 years** warranty. **15000** times On-off test, **30000** times Destructive experiment

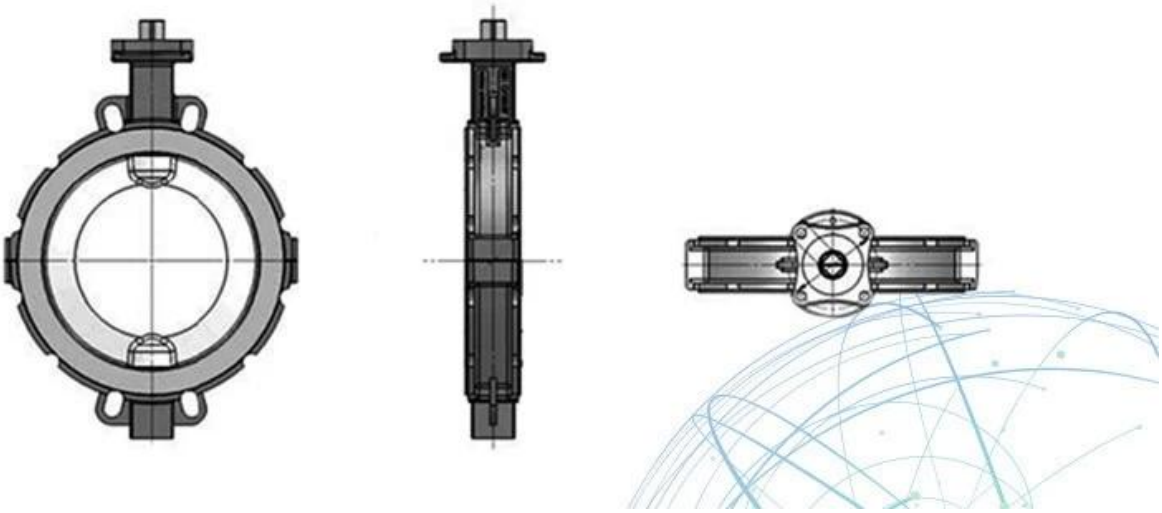

APPLICATION SCENARIO

Industrial water application | Nuclear plant | Petroleum | Steel | Wastewater treatment | Acid-base | Food | Irrigation

Our Factory

I□□□□□□□□□□□□□□□□□□□□
II□□□CNC□□□□□□□□□□□□□□□□□□□□□□□□□□□□□□
III□□□□□□□□□□□□□□□□□□□□□□□
IV□□□□□□□□□□□□□□□□□□□□□□
V□□□□□GB□□□□□□□□□□□TUV CE□ISO 9001□ADWO-2000□TS□PED□WRC WRAS□KTW□API 6D□API609□
□□□□□□□□□□□□□□□□□□□□□□□□□□□□□/□□/□□□□□□□□□□□

Exhibition Photos

Our Certificates

□□□□

□□□□□□□□□□□□□□□□□□□□
□□□□□□□□□□□□□□□□□□□□□□□□

□□□□□□□□□□
□□□□□□□□□□ RKSfluid□□□□□□□□□□□□□

□□□□□□□□

□□RKSfluid□□□□□□□□□□□

□□□□

□□□□□2~5□□□□□□□□□□□□□□

□□MOQ

□□□□□1pc□

□□□□□□□

□□□100□□□□2□□□□□□□□□□

□□□TUV□API□WRAS□CE□ISO□□

□□□DIN□ASME□BS EN□JIS□API□AWWA□

□□□□□□□□□□□□

□□RKSfluid□□20□□□□70□□R& D□□□□□□□□□□□□□□□