[illegible]

- [illegible]

- [illegible]

- [illegible]

[illegible]

- [illegible]

- [illegible]

- [illegible]

- [illegible]

- [illegible] 0.2 [illegible]

- [illegible]/[illegible]/[illegible]

- [illegible] EN 558-1[illegible]ISO 5752 [illegible] EN 1092-2[illegible]ISO 7005-2[illegible]

[illegible]	DN50 -DN600[illegible]NPS2 -NPS24[illegible]
[illegible]	PN10/16/25
[illegible]	0℃[illegible]+80℃
[illegible]	[illegible]
[illegible]	[illegible]
[illegible]	GB/T 12235-2007
[illegible]	EN 558-1
[illegible]	EN 1092-2

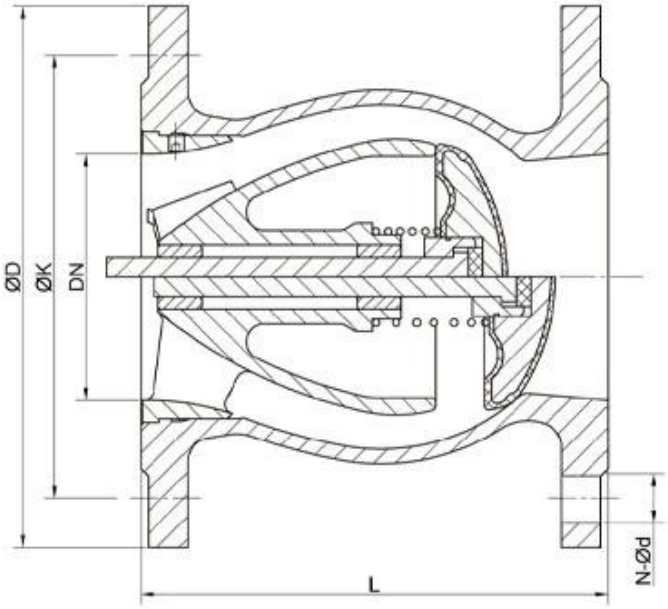

NPS2-NPS14 (DN50-DN350)

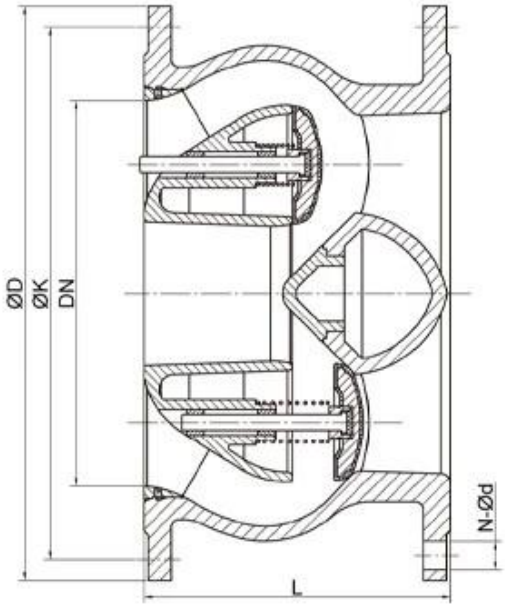

NPS16-NPS24 (DN400-DN600)

COMPANY INFORMATION

i□□□□□□□□□□□□□□□□□□□□□□□□□□□□

ii□□CNC□□

iii□□□□□□□□□□□□□□□□□□□□□□□□□□□□

iv□□□□□□□□□□□□□□□□□□□□□□□□□□□□

v□□□□□GB□□□□□□□□□□□□TUV CE□ISO 9001□ADWO-2000□TS□PED□WRC WRAS□KTW□KTW□API 6D□API609□

VI□□□□□□□□□□□□□□□□□□□□□□□□□□□□□□□□□□□□ /□□ /□□□□□□□□□□□

COMPANY FACTORY

01
21 years of professional experience
02
4 factories
03
Independent research and development team
28 top senior professional researchers
04
2 professional testing centers
05
100% high level ex-factory inspection
06
High quality imported materials
07
2 years quality assurance, repair and replacement

COMPANY QUALIFICATION

COMPANY EXHIBITION

□□□□

□□□□□□□□□□□□□□□□□□□□□□□□
□□□□□□□□□□□□□□□□□□□□□□□□□□

□□□□□□□□□□□□□□□□□□□□
□□□□□□□□□□□□□□□□□□□□□□□□RKSfluid □□□□□□□□□□□□□□□□□□□□□□□□□□□□

□□□□□□□□□□□□□□
□□RKSfluid□□□□□□□□□□□□□□□□□□

□□□□□□□□
□□□□□□□2□5□□□□□□□□□□□□□□□□□□□□□□□□

□□**MOQ**
□□□□□□□1pc□

□□□□□□□□□□
□□□□□100□□□□□□2□□□□□□□□□□□□□□□
□□□□□TUV□API□WRAS□CE□ISO□□□
□□□□DIN□ASME□BS EN□JIS□API□AWWA□

□□□□□□□□□□□□□□□□□□□
□□RKSfluid □□ 20 □□□□□70 □□□□□□□□□□□□□□□□□□□□□□□□□□□□