RKSfluid®

Proven Technology-Superior Features-
Legendary Value

KARX-Combination Kinetic Air Release Valve

NPS1-NPS12（DN25-DN300）

KARX-Combination Kinetic Air Release Valve

KARX- Combination kinetic air release valve provide 3 functions: 1.Large air release during filling of the pipeline. 2.Small air release under pressurized pipeline. 3.Large air intake during draining of the pipeline.

Features:

- Advanced design with simple mechanism, strong float to prevent cracking during sudden water hammer& quick closure.
- Aerokinetic mechanism to resist blow shut under higher air velocity even up to sonic velocity of air.
- No arms or levers to prevent vibrating, bending, direct closure of the float.
- Smooth cage outside of the float, keep float moving in specified guide rail.
- Bottom rubber buffer for collision prevention, and drain easy with proper holes around the cage during vacuum.
- Outside screen will be an option for safety and prevent insects or birds in.
- Fully fusion epoxy coated inside and outside of valve body for long term services.
- Manufacturing standard meets BS EN 1074-4, AWWA C512
- Flange drilling and dimension meets BS EN 1092 and BS EN 558 and ANSI flange.

Service Fields:

For water system, fire fighting, irrigation system.

Technical Data:

Size range:DN 25-300MM
Pressure ratings:1.0Mpa, 1.6Mpa(Thread)
1.0Mpa,1.6Mp,2.5 Mpa(Flange)
Working temperature: -10°-80°C.
Flow media: clean water

Main Valve-DN50-DN300 Parts List

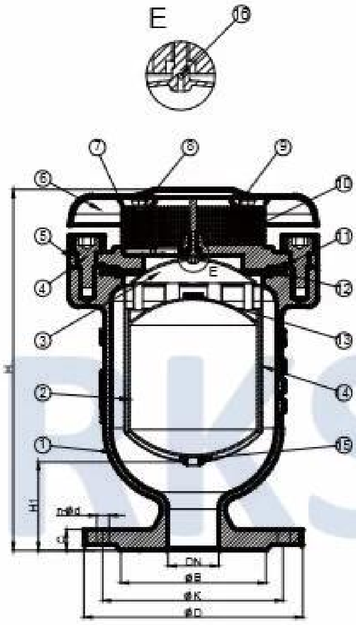

No.	Part Name	Material	Standard
1	Body	Ductile Iron	EN GJS 500-7
2	Float	Stainless Steel	AISI 304
3	Sealing Arc	Stainless Steel	AISI 304
4	In Hex Bolt	Carbon Steen/ Stainless Steel	G. I/ AISI 304
5	Bonnet	Ductile Iron	EN GJS 500-7
6	Cover	Carbon Steel	AISI 304
7	Screen	Stainless Steel	AISI 304
8	Hex Bolt	Carbon Steen/ Stainless Steel	G. I/ AISI 304
9	Washer	Stainless Steel	AISI 304
*10	Pillar	Aluminum	Commercial
11	O-ring	Rubber	NBR/EPDM
12	Seat	Rubber	NBR/EPDM
13	Nozzle Seat	Rubber	NBR/EPDM
14	Guide Barrel	Stainless Steel	AISI 304
15	Buffer	Rubber	NBR/EPDM
16	Small Nozzle	Stainless Steel	AISI 304

*: For Size ≤DN150.

Dimension

Unit: MM

		ØB			ØD			ØK			H	N-Ød		
DN	Model No.	PN10	PN16	PN25	PN10	PN16	PN25	PN10	PN16	PN25		PN10	PN16	PN25
50	KARX-0050	99	99	99	165	165	165	125	125	125	280	4-Ø19	4-Ø19	4-Ø19
80	KARX-0080	132	132	132	200	200	200	160	160	160	362	8-Ø19	8-Ø19	8-Ø19
100	KARX-0100	156	156	156	220	220	235	180	180	190	395	8-Ø19	8-Ø19	8-Ø23
150	KARX-0150	211	211	211	285	285	300	240	240	250	485	8-Ø23	8-Ø23	8-Ø28
200	KARX-0200	266	266	274	340	340	360	295	295	310	582	8-Ø23	12-Ø23	12-Ø28
300	KARX-0300	370	370	389	445	460	485	400	410	430	750	12-Ø23	12-Ø28	16-Ø31

[illegible]
1.[illegible]
2.[illegible]
3.[illegible]
[illegible]
4.[illegible]
[illegible]
5.[illegible]BS EN 1074-4[illegible]