RKSfluid®
A key Valve in Flow Control
Butterfly Valve
Ball Valve
Gate Valve
Globe Valve
Check Valve
Pipe Fittings

DESIGN FEATURES

- **Elastic** stainless steel sealing ring, **"0" leakage**
- **Fireproof** structural design, **blow-out proof** stems
- **Auto** welding **plasma powder** surfacing valve seat
- **Hollow** design, **reduces** flow resistance
- Interchangeable **DSS entity seal / multiple-piece stainless and graphite seal**
- **ISO5211** Mounting platform, simple connection

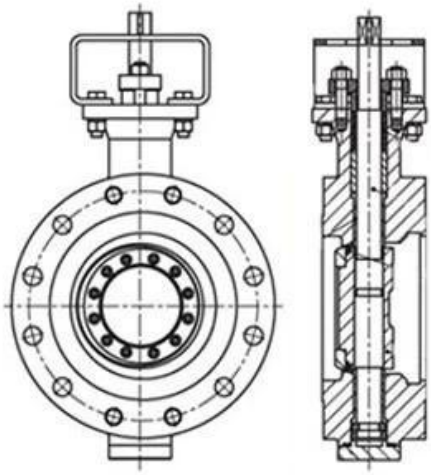

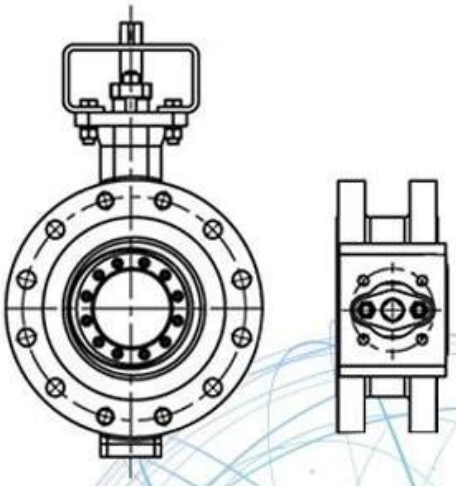

Application Scenario

Our Factory

Ⅰ□□□□□□□□□□□□□□□□□□□□□

Ⅱ□□□CNC□□□□□□□□□□□□□□□□□□□□□□□□□□□□□□□□□

Ⅲ□□□□□□□□□□□□□□□□□□□□□□□□□

Ⅳ□□□□□□□□□□□□□□□□□□□□□□

V□□□□□GB□□□□□□□□□□□TUV CE□ISO 9001□ADWO-2000□TS□PED□WRC WRAS□KTW□API 6D□API609□

□□□□□□□□□□□□□□□□□□□□□□□□□□□□□□□□□□/□□/□□□□□□□□□□□□

Exhibition Photos

Our Certificates

□□□□

□□□□□□□□□□□□□□
□□□□□□□□□□□□□□□□

□□□□□□□□□□□

□□□□□□□□□□□ RKSfluid□□□□□□□□□□□□□□□

□□□□□□□□□

□□RKSfluid□□□□□□□□□□□□

□□□□□

□□□□□2~5□□□□□□□□□□□□□□□

□□MOQ

□□□□□□1pc□

□□□□□□□

□□□□100□□□2□□□□□□□□□□□

□□□□TUV□API□WRAS□CE□ISO□□□

□□□DIN□ASME□BS EN□JIS□API□AWWA□

□□□□□□□□□□□□□

□□RKSfluid□□20□□□□70□□□□□□□□□□□□□□□□□□□