□□□□□

| | |
|---|---|
| □□□□□ | □□□□ |
| □□□ | 160X160X100□□ |
| □□□□□ | 38,000□□ |
| □□□□□ | 1□/□□□□□□□□□/□□□□□□□□□□□□□□□□□ |
| □□□□ □ | □ □ □ 1 > - 1 1 □ 6 0 □ □ □ □ |

□□

1.□□□□□□□□□□□□□□□□□□□□□□□□□□□□□□□□□□□□□□

2.□□□□□□□□□□□□□□□□□□□□

3.□□□□□□□□□□□□□□□□□□□□□□□□□□□□□□□□□□□□□□□□□□□□□□□□□□□□□□□□□□□□□

4.□□□□□□□□□□□□□□□□□□□□□□□□□□□□□□□□□□□□□□□□□□□□□□□□□□□□

5.□□BS EN 1074-4□□

Main Valve-DN50-DN300

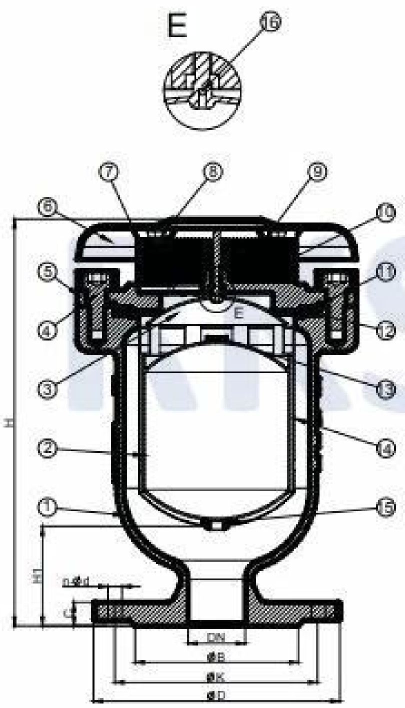

Parts List

| No. | Part Name | Material | Standard |
|---|---|---|---|
| 1 | Body | Ductile Iron | EN GJS 500-7 |
| 2 | Float | Stainless Steel | AISI 304 |
| 3 | Sealing Arc | Stainless Steel | AISI 304 |
| 4 | In Hex Bolt | Carbon Steen/ Stainless Steel | G. I/ AISI 304 |
| 5 | Bonnet | Ductile Iron | EN GJS 500-7 |
| 6 | Cover | Carbon Steel | AISI 304 |
| 7 | Screen | Stainless Steel | AISI 304 |
| 8 | Hex Bolt | Carbon Steen/ Stainless Steel | G. I/ AISI 304 |
| 9 | Washer | Stainless Steel | AISI 304 |
| *10 | Pillar | Aluminum | Commercial |
| 11 | O-ring | Rubber | NBR/EPDM |
| 12 | Seat | Rubber | NBR/EPDM |
| 13 | Nozzle Seat | Rubber | NBR/EPDM |
| 14 | Guide Barrel | Stainless Steel | AISI 304 |
| 15 | Buffer | Rubber | NBR/EPDM |
| 16 | Small Nozzle | Stainless Steel | AISI 304 |

*: For Size ≤DN150.