Features

Air Release valve

Size range:DN25-DN300

Pressure ratings:PN10 PN16

Body:Ductile Iron

Trim:SS304 SS316 etc

Connection:ARVS/KARS-BPT threaded, KARX-Flanged

Working temperature: -10℃~+80℃

□□□

1.□□□□□□□□□□□□□□□□□□□□□□□□□□□□□□□□ 2.□□□□□□□□□□□□□□□□□□□□□□□□□□□□□□□□ 3.□□ 4.□□□ 5.comply□BS EN 1074-4

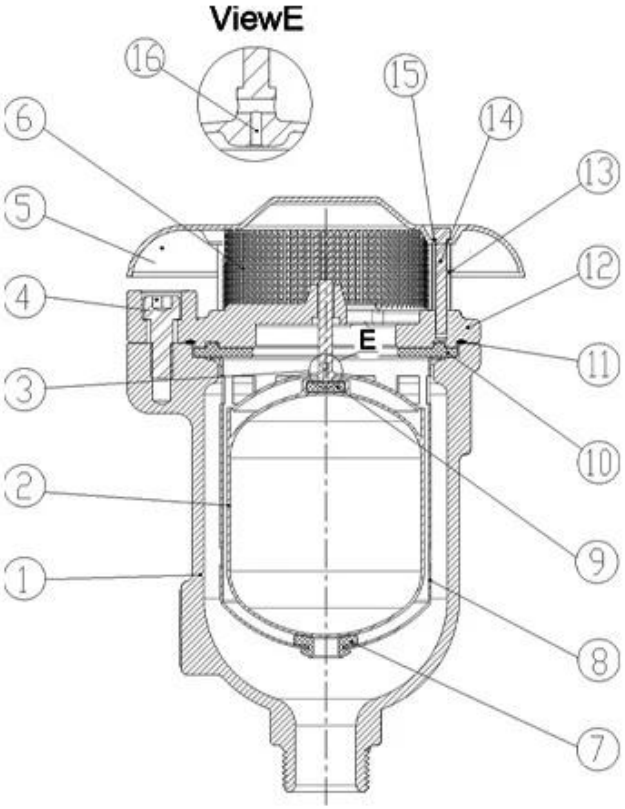

DN25-DN50

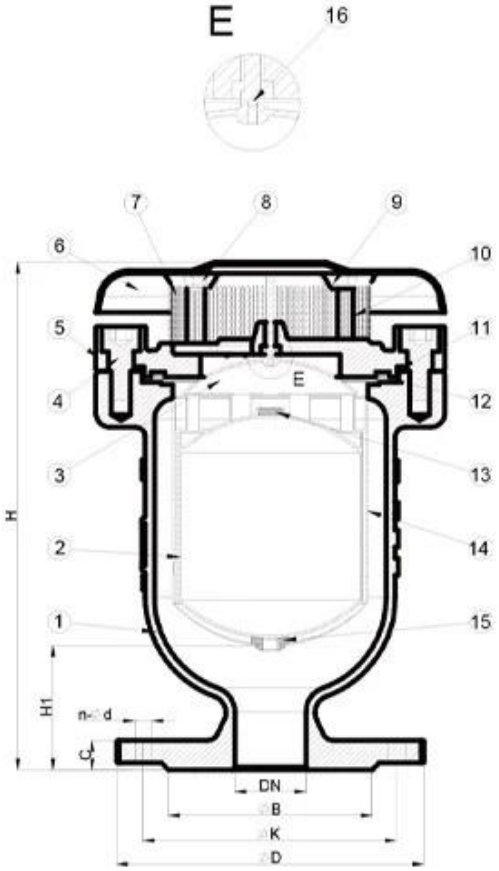

DN50-DN300

Our Factory

RKSfluid[illegible]1997[illegible]Foundry[illegible]
[illegible]
[illegible]CNC[illegible]
[illegible]
[illegible]

□□□□□□□□□□□GB□□
□□□□□□□□□□□□
□□□□□□□□□□RKS□□
□□□□□□□□□□□□□□□□□□□□□□□□
□□□GB□ISO□□□□□□□TUV□□CE□ADWO-2000□
ISO9001□TS□API□□□□□□□□□□□□□
□□□□□□□□□□□□□□
□□□□□□□□□□□□□□□□□□□□
□□□□□□□□□□□□□□□
□□□“□□□□□□□□□□□□□”□□□
□□□□□□□□□□□□□□□
i□□□□□□□□□□□□□□□

ii□□CNC□□□□□□□□□□□□□□□□□□□

iii□□□□□□□□□□□□□□□□

iv□□□□□□□□□□□□□□□□□

v□□□□GB□□□□□□□□TUV CE□ISO 9001□ADWO-2000□TS□PED□WRC
WRAS□KTW□KTW□API 6D□API609□

VI□□□□□□□□□□□□□□□□□□□□□ /□□ /□□□□□□□

Our Certificates

Exhibition Photos