DESIGN FEATURES

Features

- Use AkzoNobel material.
- Super Anti-corrosion
- Epoxy powder coating 200-250um,
- Baking varnish over 200℃,

NO.		
1	Body	GGG50
2	Dise	GGG40+EPDM
3	Wedge nut	C48600
4	Stem	SS431
5	Bonnet	GT450-10
6	Gasket	EPDM
7	Y-ring	EPDM85-90
8	Fix ring	CuZn21Si3/C69300
9	Thrust bearing	C69300
10	Seal ring	EPDM70
11	O ring	NBR
12	Retainer ring	POM
13	Bushing ring	POM
14	Gland	SS431
15	Dustproof ring	EPDM85
16	Dise core	GGG40
17	Bolt	SS316

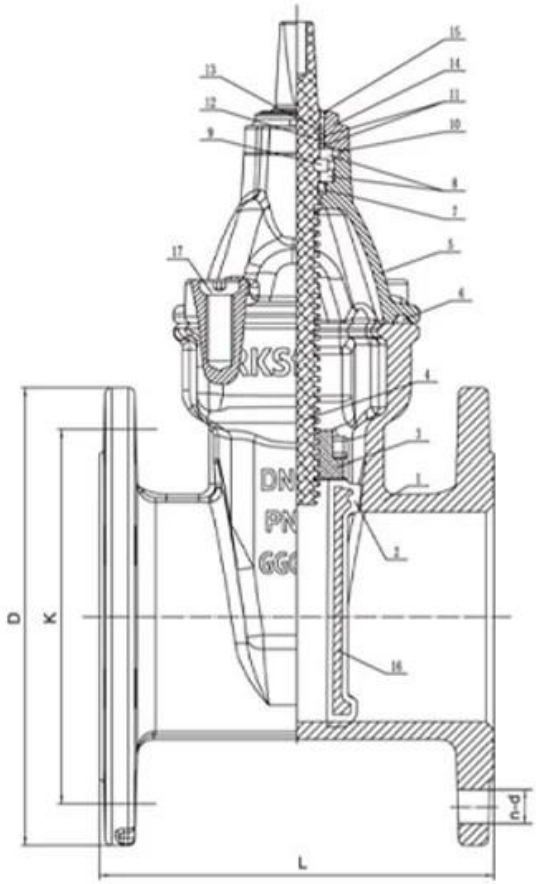

Free wedge nut, **reduces the stem bending forces** and at the same time enables it to be easily replaced.

The more compact new cap, reduces the water retention areas in order **to reduce the risk of bacterial growth**.

One piece stainless steel stem in for **better resistance to axial load and to with stand higher operating torques**.

Three locking tab for bayonet system prevents self-dismantling.

Dust guard integrating three O-ring shape, **prohibiting the introduction of foreign** bodies at the stem.

Male guiding system with composite sliding skate reduces the wear of the wedge against the body, allowing a smooth functionality and a longer life time of the valve.

Triple seal at the operating stem to ensure tightness with the test of time (2500 cycles).

New male composite sliding skate technology ensuring a low operating torque even under high differential pressure and preventing damage or corrosion generated by the friction.

RELATED PRODUCTS

APPLICATION SCENARIO

Industrial water application | Power plant | Sea water desalination | Water treatment | Water supply and drainage | HAVC | Food and drug | Water transport

COMPANY FACTORY

COMPANY INFORMATION

I Business area: fluid control products, technology and environmental protection products.

Ⅱ Advanced CNC machining centers, professional process cells, wide-range welding equipment, automatic assembly lines and coating.

Ⅲ China's standard reference unit, to participate in the development of relevant valve industry standards.

Ⅳ We have set up a research and development center in Houston, Texas, in the United States.

V Product Standard: GB, German Standard, American Standard, TUV CE, ISO 9001, ADWO-2000, TS, PED, WRC WRAS, KTW, API 6D, API609.

VI Main production: butterfly valve, ball valve, gate valve, check valve, globe valves, pipe fittings, manual / pneumatic / electric actuator, valve parts.

01 21 years of professional experience

02 4 factories

03 Independent research and development team
28 top senior professional researchers

04 2 professional testing centers

05 100% high level ex-factory inspection

06 High quality imported materials

07 2 years quality assurance, repair and replacement

COMPANY QUALIFICATION

COMPANY EXHIBITION

FAQ

Q: If I need quotation, what informations do we need?
A: Valves' materials, Temperature, Pressure, Medium, Appllication System.

Q: Can you provide actuators, what you have?
A: Pneumatic, Electric, Hrdraulic, Solenoid Valves. RKSfluid actuators adopt USA technology. Which you need, just tell us.

Q: What's your productive capacity?
A: RKSfluid has four plants that can provide the products you need.

Q: Production lead time
A: Normal products have stock in 2~5 working days. Customized base on your need.

Q: MOQ
A: 1pc for all products.

Q: How about the quality assurance?
A: 100% quality test before delivery, 2 years warranty. Ensure your system working safety. We got TUV, API, WRAS, CE, ISO certification.
Standard conform to DIN, ASME, BS EN, JIS, API, AWWA.

Q: How could you provide quality service to our customers?

A: RKSfluid own 20 years experiences and more than 70 R&D engineers provide technical support, model selection and installation guidance for you.