□□□

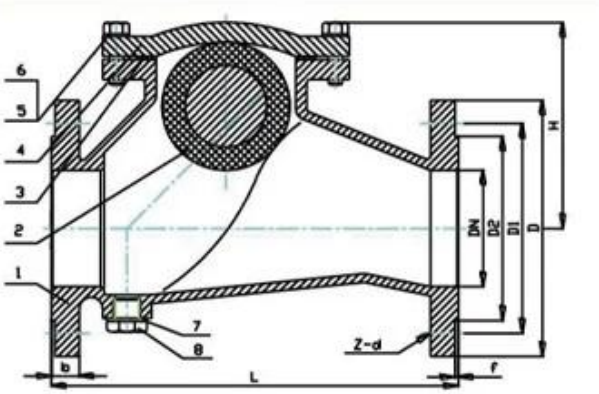

Ball Check Valve, Flange

Name	Material
Body	Ductile iron
Ball	NBR
Gasket	NBR
Body	Ductile iron
Bolt	SS304
Washer	SS304
Washer	Nylon
Plug	SS304

SHIPPING PACKAGING

- Streamlined, minimum noise
- Backflow velocity only 0.2s, Head loss 0.1bar with 2m/s
- EPDM/NBR Rubber fully coated disc
- Anti-erosion design, Self-adjusting ball
- Self-cleaning stem, Long time smooth operation

Engineering Projects

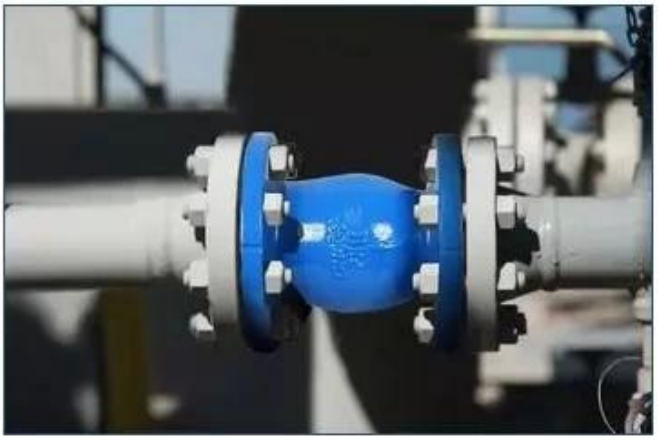

COMPANY INFORMATION

i□□□□□□□□□□□□□□□□□□□□□□□□□□□□□□

divanced Advanced CNC□□□□□□□□□□□□□□□□□□□

relaved□□□

COMPANY EXHIBITION

□□□□□□

Q□□□□□□□□□□□□□□□□□□□□□□□□□□□□□□
A□□□□□□□□□□□□□□□□□□□

Q□□□□□□□□□□
A□□□□□□□□□2□5□□□□□□□□□□