RKSfluid®
A key Valve in Flow Control
Butterfly Valve
Ball Valve
Gate Valve
Globe Valve
Check Valve
Pipe Fittings

DESIGN FEATURES

DURABLE

- **1 piece** non-welded **PFA** molded **DSS** Disc stem
- **Precision casting** WCB/CF8M Bodies

TRIPLE SEAL

- **Triple Seal**: Spring loaded Mechanical seal, Radial Lip Seal, FPM
- China **ONLY ONE** Manufacturer **400Mpa Isostatic pressing** PTFE seat, **consistent density**

ANTI-CORROSION

- **Material: Epoxy powder: AkzoNobel, Earth Best!**
- Coating Thickness: **200-250μm**
- Spraying temp: over **200℃**. Doesn't fade, even wipe with diethyl ether

QUALITY STANDARD

- **100% quality test**, follow DIN, ASTM, JIS, GB/T, ISO, BS EN, API
- **ONLY ONE** Manufacturer get **CE** certification up to **DN1800**
- **2 years** warranty. **15000** times On-off test, **30000** times Destructive experiment

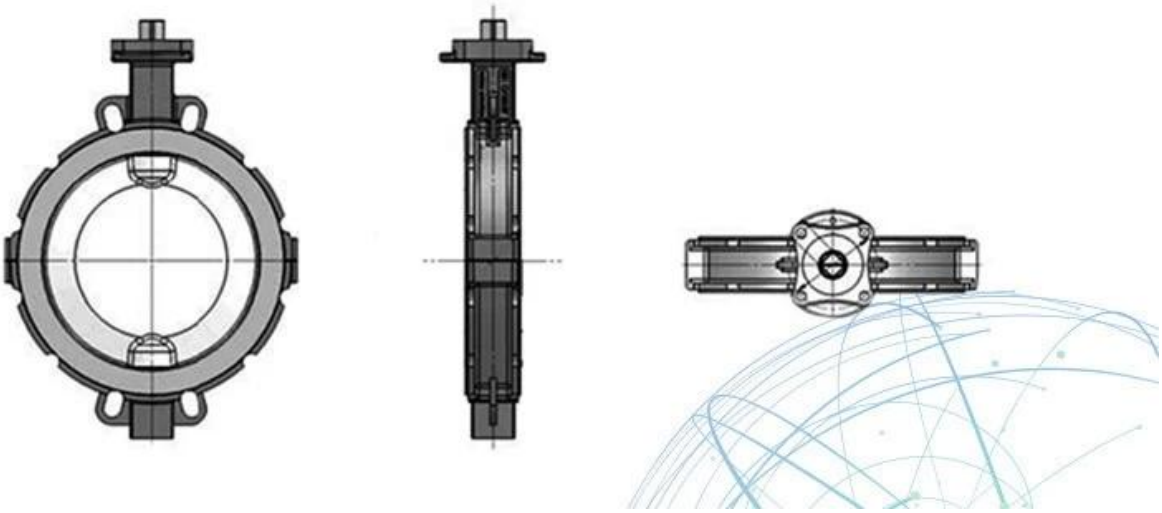

APPLICATION SCENARIO

Industrial water application | Nuclear plant | Petroleum | Steel | Wastewater treatment | Acid-base | Food | Irrigation

Our Factory

I[illegible]

II[illegible]CNC[illegible]

III[illegible]

IV[illegible]

V[illegible]GB[illegible]TUV CE[illegible]ISO 9001[illegible]ADWO-2000[illegible]TS[illegible]PED[illegible]WRC WRAS[illegible]KTW[illegible]API 6D[illegible]API 609[illegible]

VI□□/□□□/□□□□□□□□□□□□□□

Exhibition Photos
RKSfluid

Our Certificates
Real
Certificate
Zertifikat
WRAS
CERTIFICATE

□□□□□

Q□□□□□□□□□□□□□□□□□□□□□□□

A□□□□□□□□□□□□□□□□□□□□□□□□

Q□□□□□□□□□□□□□□□□□□□□□□
A□□□□□□□□□□□□□□□□□ RKSfluid□□□

Q□□□□□□□□□□□
A□RKSfluid□□□□□□□□□□□□□□□4□□□□□□□□□□

Q□□□□□□□□□
A□□□□□□□2□5□□□□□□□□□□□□□□□□□□□□□□□□□□□□□□□□□

Q□MOQ
A□□□□□□□1□□

Q□□□□□□□□□□□□
A□□□□□□100□□□□□□□□□□2□□□□□□□□□□□□□□□□□□□□□□□
□□□TUV□API□WRAS□□□□□□ISO□□□□□□□□□
□□□DIN□ASME□BS EN□JIS□API□AWWA□□□□□□□□□

Q□□□□□□□□□□□□□□□□□□□□□□□□□□□
A□RKSfluid□20□□□□□□□□□70□□□