DESIGN FEATURES

DURABLE

- No-pin connection, 1 pc blow-out proof stem
- DI/CI Nodularity over 95%

ANTI-CORROSION

- Material: Epoxy powder: AkzoNobel, Earth Best!
- Coating Thickness: 200-250μm
- Spraying temp: over 200℃. Doesn't fade, even wipe with diethyl ether

QUALITY STANDARD

- 100% quality test, follow DIN, ASTM, JIS, GB/T, ISO, BS EN, API
- ONLY ONE Manufacturer get CE certification up to DN1800
- 2 years warranty. 15000 times On-off test, 30000 times Destructive experiment

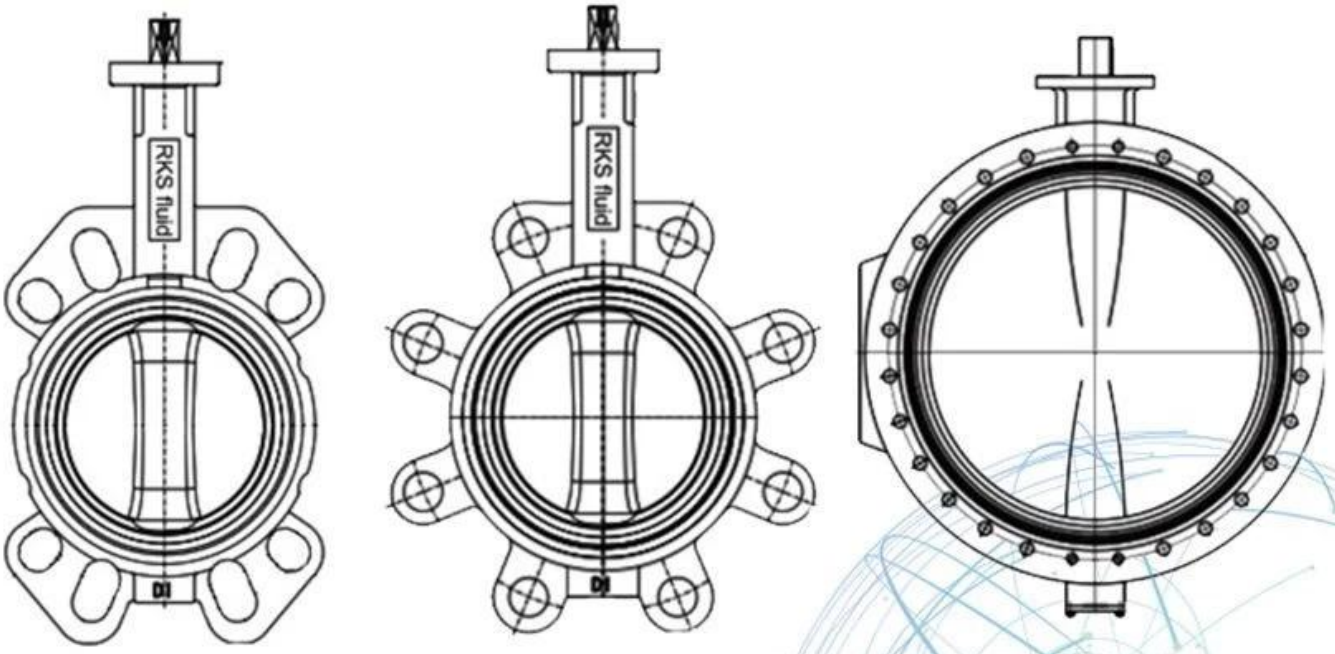

Application Scenario

Our Factory

Company Advantages

01 21 years of professional experience

02 4 factories

03 Independent research and development team
28 top senior professional researchers

04 2 professional testing centers

05 100% high level ex-factory inspection

06 High quality imported materials

07 2 years quality assurance, repair and replacement

◎[illegible]

✓[illegible]CNC[illegible]

✓[illegible]

✓[illegible]

✓[illegible]GB[illegible]TUV CE[illegible]ISO 9001[illegible]ADWO-2000[illegible]TS[illegible]PED[illegible]WRC WRA[illegible]KTW[illegible]API 6D[illegible]API609[illegible]

VI[illegible]/[illegible]/[illegible]

Exhibition Photos

□□□□□□

Q□□□□□□□□□□□□□□□□□□□□□□□□□
A□□□□□□□□□□□□□□□□□□□□□□□□

Q□□□□□□□□□□□□□□□□□□□□□□□□□□□□□□
A□□□□□□□□HRRAULIC□□□□□□□□□□ RKSfluid□□□
□□□□□□□

Q□□□□□□□□□□□□□□□□□
A□RKSfluid□□□□□□□□□□□□□□4□□□□□□□□□□□□

Q□□□□□□□□□
A□□□□□□□2~5□□□□□□□□□□□□□□□□□□□□□□□□□□□□□□□□□□

Q□MOQ
A□□□□□□□□1□□□□

Q□□□□□□□□□□□□
A□□□□□100□□□□□□□2□□□□□□□□□□□□□□□□□□□□
TUV□API□WRAS□CE□ISO□□□□□□□□
□□□DIN□ASME□BS EN□JIS□API□AWWA□□□□□□□□□

Q[illegible]

A[illegible]RKSfluid[illegible]20[illegible]70[illegible]

2 4 6 8[illegible]IV[illegible]