DESIGN FEATURES

1.Elastic stainless steel sealing ring,"0"leakage

2.Fireproof structural design,blow-out proof stems

3.Auto welding plasma powder surfacing valve seat

4.Hollow design,reduces flow resistance

5.Interchangeable DSS entity seal / multiple-piece

6.stainless and graphite seal

7.ISO5211 Mounting platform,simple connection

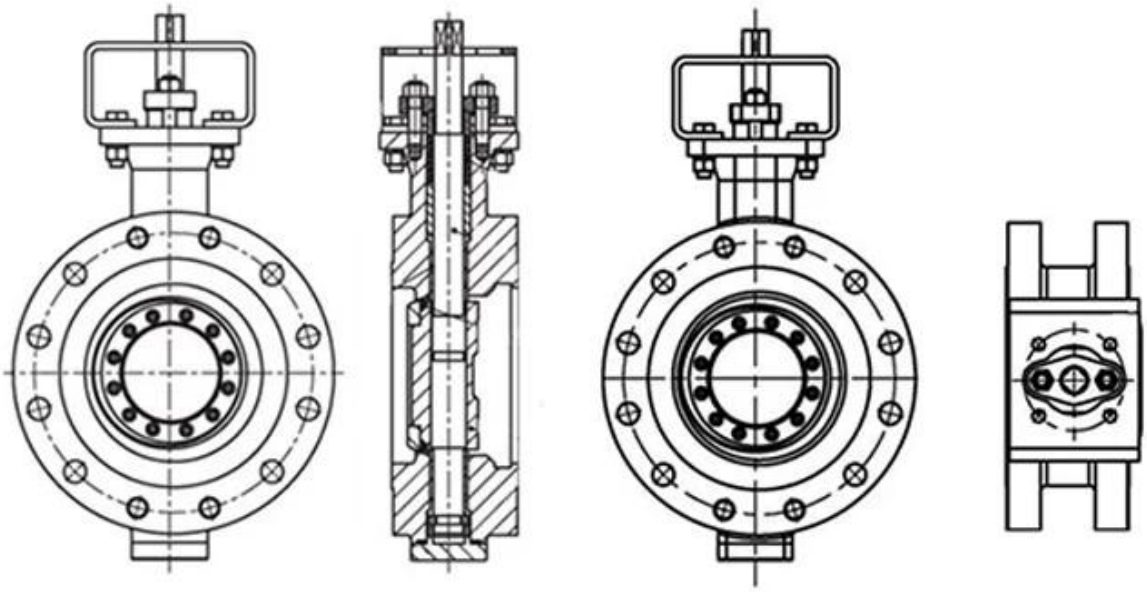

APPLICATION SCENARIO

Industrial water application | Power plant | Sea water desalination | Water treatment | Water supply and drainage | HAVC | Food and drug | Water transport

COMPANY INFORMATION

i[illegible]

divanced Advanced CNC[illegible]

relaved[illegible]

us[illegible]

inude[illegible]GB[illegible]TUV CE□ISO 9001□ADWO-2000□TS□PED□WRC WRA□KTW□API 6D□API609□

VI[illegible] /[illegible] /[illegible]

01
21 years of professional experience
02
4 factories
03
Independent research and development team
28 top senior professional researchers
04
2 professional testing centers
05
100% high level ex-factory inspection
06
High quality imported materials
07
2 years quality assurance, repair and replacement

COMPANY QUALIFICATION

COMPANY EXHIBITION

Partners

TALIS
GEMÜ
WATTS
Bray
hawle
amri
BAYARD
AVK
EBRO
KEYSTONE
EMERSON
GIBSON
CAMERON
CMO VALVES
SWISS fluid
SAINT-GOBAIN
KSB
tyco
TTV
SAPAG
haike

□□□□□□

Q□□□□□□□□□□□□□□□□□□□□□□□□□□□□□□□□□
A□□

Q□□□□□□□□□□□□□□□□□□□□□□□□□□□
A□□□□□□□□□hrdraulic□□□□□□□□□□□RKSfluid□□□□□□□□USA□□□□□□□□□□□□□□□□□□□□□□□□□□□□□□□□□□□□□□

Q□□□□□□□□□□□□□□□□□□□□□
A□RKSfluid□□□□□□□□□□□□□□□□4□□□□□□□□□□□□

Q□□□□□□□□□□□
A□□□□□□□□□2□5□□□

Q□Moq
A□□□□□□□□□1PC□

Q□□□□□□□□□□□□□□□□
A□□□□□100□□□□□□□□2□□□□□□□□□□□□□□□□□□□□□□□□□□□□□□
TUV□API□WRA□CE□ISO□□□□□□□□□□□□
□□din□asme□bs en□jis□api□awwa□□□□□□□□□□□

Q□□
A□RKSfluid□□□20□□□□□70□□□□R□D□□□