DESIGN FEATURES

DURABLE

- No-pin connection,1 pc blow-out proof stem
- DI/CI Nodularity over 95%

ANTI-CORROSION

- Material: Epoxy powder: AkzoNobel Earth Best!
- Coating Thickness:200-250μm
- Spraying temp: over 200°C. Doesn't fade, even wipe with diethyl ether

QUALITY STANDARD

- 100% quality test, follow DIN, ASTM, JIS, GB/T, ISO, BS EN, API
- ONLY ONE Manufacturer get CE certification up to DN1800
- 2 years warranty.15000 times On-off test,30000 times Destructive experiment

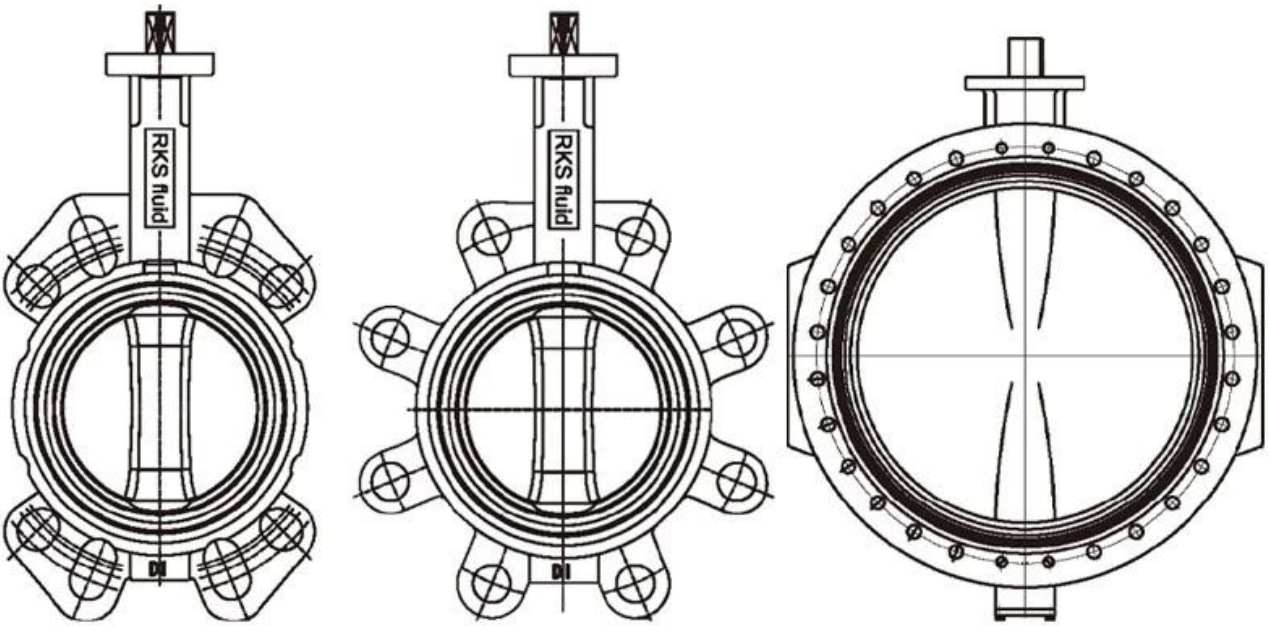

APPLICATION SCENARIO

Industrial water application | Power plant | Sea water desalination | Water treatment | Water supply and drainage | HAVC | Food and drug | Water transport

COMPANY FACTORY

COMPANY INFORMATION

i□□□□□□□□□□□□□□□□□□□□

divanced Advanced CNC□□□□□□□□□□□□□□□□□□□□□□□□□□□□□□□□□□□□□□

relaved□□□□□□□□□□□□□□□□□□□□□□□□□□□□□

us□□□□□□□□□□□□□□□□□□□□□□□□□

inude□□□□GB□□□□□□□□□□□TUV CE□ISO 9001□ADWO-2000□TS□PED□WRC WRA□KTW□API 6D□API609□

VI□□□□□□□□□ [□□□□□□□] □□□□□□□□□□□□□□□□□□□□□□□□□□□□□□□□□□□□□□□/□□□/□□□□□
□□□□□□□□□

01 21 years of professional experience

02 4 factories

03 Independent research and development team
28 top senior professional researchers

04 2 professional testing centers

05 100% high level ex-factory inspection

06 High quality imported materials

07 2 years quality assurance, repair and replacement

COMPANY QUALIFICATION

□□□□□□□

Q□□□□□□□□□□□□□□□□□□□□□□□□□
A□□□□□□□□□□□□□□□□□□□□□□□□□□□□□□□□

Q□□□□□□□□□□□□□□□□□□□
A□□□□□□□□hrdraulic□□□□□□□□□□ RKSfluid□□□□□□□□USA□□□□□□□□□□□□□□□□□□□□□□□□□□□□□□

Q□□□□□□□□□□□□□□□□
A□RKSfluid□□□□□□□□□□□□□□□□4□□□□□□□□□□

Q□□□□□□□□□
A□□□□□□□□2□5□□□□□□□□□□□□□□□□□□□□□□□□□□□□□□□□□□□□□

Q□Moq
A□□□□□□□□1PC□

Q□□□□□□□□□□□□
A□□□□□100□□□□□□□2□□□□□□□□□□□□□□□□□□□□□□□
TUV□API□WRA□CE□ISO□□□□□□□□□□
□□din□asme□bs en□jis□api□awwa□□□□□□□□□

Q□□□□□□□□□□□□□□□□□□□□□□□□□□□□□
A□RKSfluid□□□20□□□□□70□□□R□D□□□