DESIGN FEATURES

Features

- Use AkzoNobel material.
- Super Anti-corrosion
- Epoxy powder coating 200-250um,
- Baking varnish over 200℃,

NO.		
1	Body	GGG50
2	Dise	GGG40+EPDM
3	Wedge nut	C48600
4	Stem	SS431
5	Bonnet	GT450-10
6	Gasket	EPDM
7	Y-ring	EPDM85-90
8	Fix ring	CuZn21Si3/C69300
9	Thrust bearing	C69300
10	Seal ring	EPDM70
11	O ring	NBR
12	Retainer ring	POM
13	Bushing ring	POM
14	Gland	SS431
15	Dustproof ring	EPDM85
16	Dise core	GGG40
17	Bolt	SS316

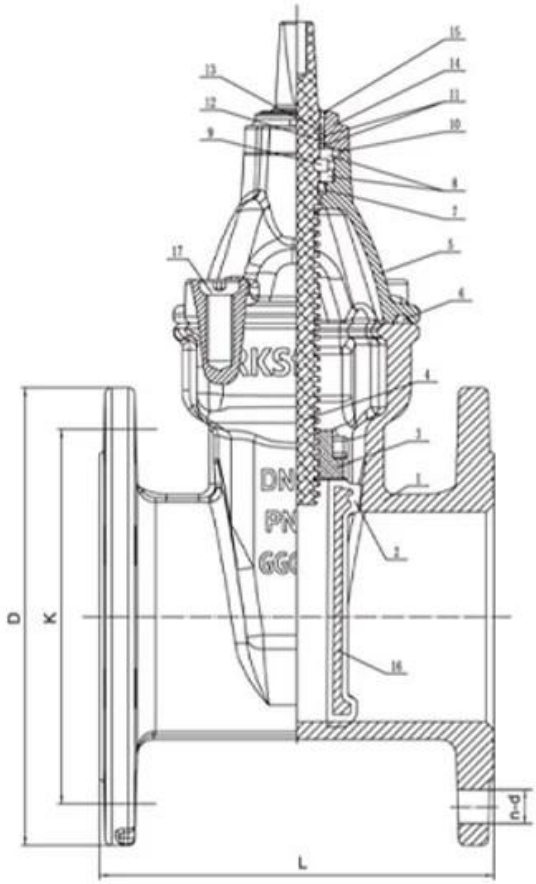

Free wedge nut, **reduces the stem bending forces** and at the same time enables it to be easily replaced.

The more compact new cap, reduces the water retention areas in order **to reduce the risk of bacterial growth**.

One piece stainless steel stem in for **better resistance to axial load and to with stand higher operating torques**.

Three locking tab for bayonet system prevents self-dismantling.

Dust guard integrating three O-ring shape, **prohibiting the introduction of foreign** bodies at the stem.

Male guiding system with composite sliding skate reduces the wear of the wedge against the body, allowing a smooth functionality and a longer life time of the valve.

Triple seal at the operating stem to ensure tightness with the test of time (2500 cycles).

New male composite sliding skate technology ensuring a low operating torque even under high differential pressure and preventing damage or corrosion generated by the friction.

RELATED PRODUCTS

APPLICATION SCENARIO

Industrial water application | Power plant | Sea water desalination | Water treatment | Water supply and drainage | HAVC | Food and drug | Water transport

COMPANY FACTORY

COMPANY INFORMATION

i□□□□□□□□□□□□□□□□□□□□

divanced Advanced CNC□□□□□□□□□□□□□□□□□□□□□□□□□□□□□□□□□□□□□

relaved□□□□□□□□□□□□□□□□□□□□□□□□□□□□

us□□□□□□□□□□□□□□□□□□□□□□□□□

inude□□□□GB□□□□□□□□□□□TUV CE□ISO 9001□ADWO-2000□TS□PED□WRC WRA□KTW□API 6D□API609□

VI□□ /□□□ /□□□□□ □□□□□□□□□

01 21 years of professional experience

02 4 factories

03 Independent research and development team
28 top senior professional researchers

04 2 professional testing centers

05 100% high level ex-factory inspection

06 High quality imported materials

07 2 years quality assurance, repair and replacement

COMPANY QUALIFICATION

COMPANY EXHIBITION

□□□□□

Q□□□□□□□□□□□□□□□□□□□□□□□□
A□□□□□□□□□□□□□□□□□□□□□□□□□□□□□□□

Q□□□□□□□□□□□□□□□□□□
A□□□□□□□□□□□□□□□□hrdraulic□□□□□□□□□□ RKSfluid□□□□□□□□USA□□□□□□□□□□□□□□□□□□□□□□□□□□□□□

Q□□□□□□□□□□□□□□□
A□RKSfluid□□□□□□□□□□□□□□□4□□□□□□□□□

Q□□□□□□□□□
A□□□□□□□□2□5□□□□□□□□□□□□□□□□□□□□□□□□□□□□□□□□□□□□

Q□Moq
A□□□□□□□□1PC□

Q□□□□□□□□□□□□
A□□□□□□100□□□□□□□2□□□□□□□□□□□□□□□□□□□□□□□
TUV□API□WRA□CE□ISO□□□□□□□□□□
□□din□asme□bs en□jis□api□awwa□□□□□□□□□

Q□□□□□□□□□□□□□□□□□□□□□□□□□□□□
A□RKSfluid□□□20□□□□□70□□□□R□D□□□