Air Release valve

Size range:DN25-DN300
Pressure ratings:PN10 PN16
Body:Ductile Iron
Trim:SS304 SS316 etc
Connection:ARVS/KARS-BPT threaded, KARX-Flanged
Working temperature: -10℃~+80℃

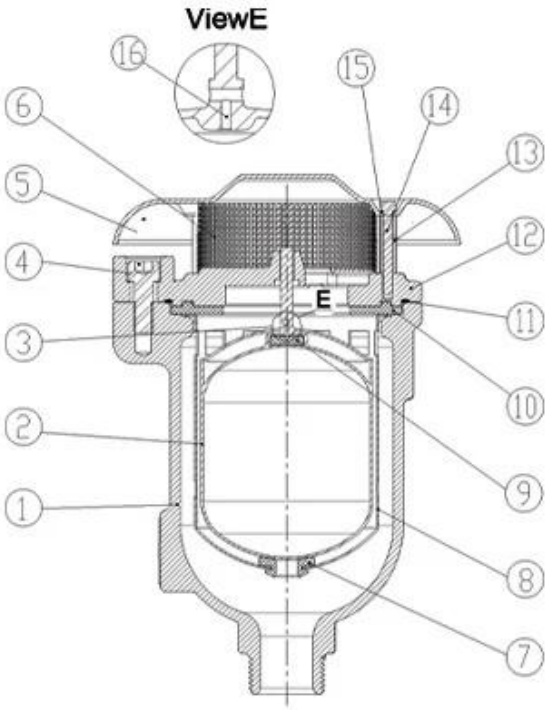

DN25-DN50

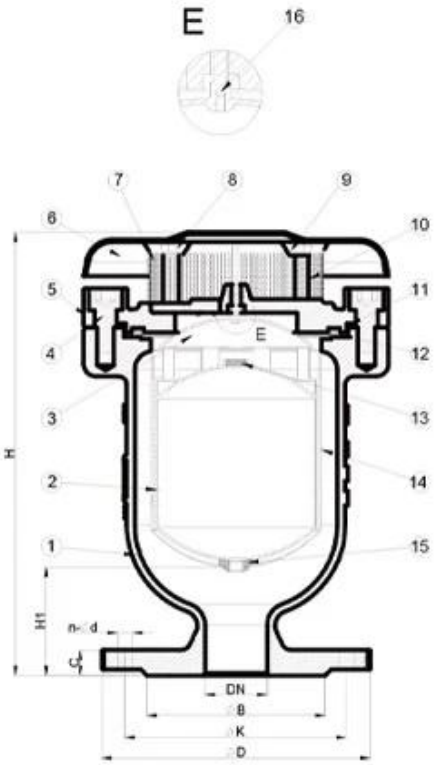

DN50-DN300

□□□
1.□□□

COMPANY INFORMATION

RKSfluid□1997□□□CNC□□□□□□□□□□□□□□□□□□□

COMPANY FACTORY

i□□□□□□□□□□□□□□□□□□□□□□□□□□□□□□

divanced Advanced CNC□□□□□□□□□□□□□□□□□□□

v□□□□□GB□□□□□□□American Standard□Tuv CE□ISO 9001□ADWO-2000□TS□PED□WRC WRA□KTW□API 6D□API609□

VI□□□□□□□

COMPANY QUALIFICATION

COMPANY EXHIBITION

Partners
TALIS
GEMÜ
WATTS
Bray
hawle
amri
BAYARD
AVK
EBRO
KEYSTONE
EMERSON
GIBSON
CAMERON
CMO VALVES
SWISS fluid
SAINT-GOBAIN
KSB
tyco
TTV
SAPAG
haike

Delivery
ups
DHL
FedEx Express
EMS
TNT
DHL
Payment
PayPal
WESTERN UNION
VISA
ESCROW
MasterCard
HSBC

□□□□□□□□

Q□□□□□□□□□□□□□□□□□□□□□□□□□□□□□□

A□□

Q□□□□□□□□□□□□□□□□□□□□□□

A□□□□□□□□Hrdraulic□□□□□□□□□□RKSfluid□□□□□□□□USA□□□□□□□□□□