□□

□□□□□□□□□□□□□□□□□□□□□□□□□

□Diffuser□□

□□□□□□□□□□□□□□□□□□1□□□

□□□□□□□□□□□□□□□□□□□□□□□□□□□

□□□□□□□□□□□□□□□□□□□□□□□□□□□□□□□□□□□□□□

□□□□□□□□□□□□□□□□□□□□□□□□□□□

□□□

□□□

□□□□□□□□□□□□□□□□□□□0.2□□□□□□□□□□□□□□□□

□□□□□□□□□□□/□□/□□□□□□□□□□□□□

□EN 558-1□ISO 5752□□□EN 1092-2□ISO 7005-2□□□□□□□□□□□□□□□

□□□	DN50 -DN600□NPS2 -NPS24□
□□□□	PN10/16/25
□□□□	0 ℃□+80℃
□	□□□□□□□□□□
□□□□	□□□□
□□□□□□	GB/T 12235-2007
□□□□□□	EN 558-1
□□□□	EN 1092-2

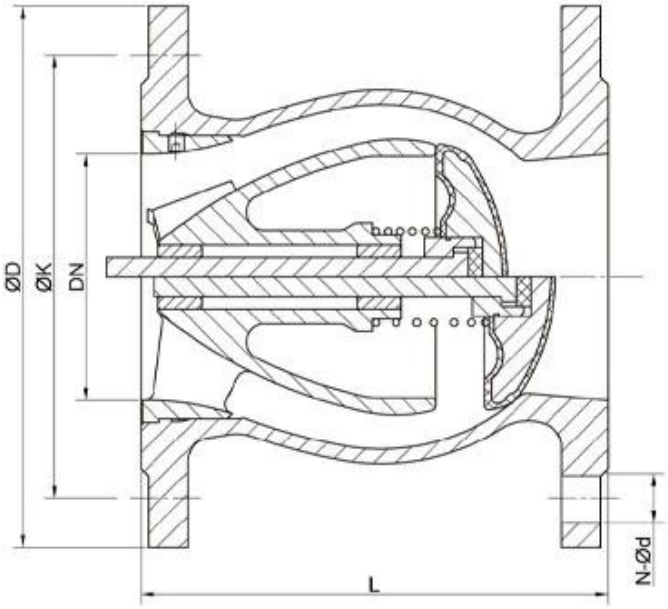

NPS2-NPS14 (DN50-DN350)

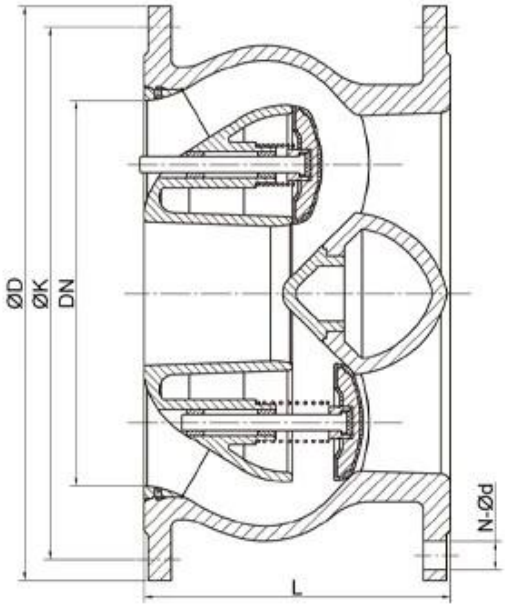

NPS16-NPS24 (DN400-DN600)

COMPANY INFORMATION

i[illegible]

divanced Advanced CNC[illegible]

relaved[illegible]

us[illegible]

inude[illegible]GB[illegible]TUV CE[illegible]ISO 9001[illegible]ADWO-2000[illegible]TS[illegible]PED[illegible]WRC WRA[illegible]KTW[illegible]API 6D[illegible]API609[illegible]

VI[illegible] /[illegible] /[illegible]

COMPANY FACTORY

01
21 years of professional experience
02
4 factories
03
Independent research and development team
28 top senior professional researchers
04
2 professional testing centers
05
100% high level ex-factory inspection
06
High quality imported materials
07
2 years quality assurance, repair and replacement

COMPANY QUALIFICATION

COMPANY EXHIBITION

□□□□□

Q□□□□□□□□□□□□□□□□□□□□□□□□□□
A□□□□□□□□□□□□□□□□□□□□□□□□□□□□□□□□

Q□□□□□□□□□□□□□□□□□□□□
A□□□□□□□□hrdraulic□□□□□□□□□□RKSfluid□□□□□□□□USA□□□□□□□□□□□□□□□□□□□□□□□□□□□□□□□

Q□□□□□□□□□□□□□□□□
A□RKSfluid□□□□□□□□□□□□□□□4□□□□□□□□□□□

Q[illegible]
A[illegible]2[illegible]5[illegible]

Q[illegible]Moq
A[illegible]1PC[illegible]

Q[illegible]
A[illegible]100[illegible]2[illegible]
TUV[illegible]API[illegible]WRA[illegible]CE[illegible]ISO[illegible]
[illegible]din[illegible]asme[illegible]bs en[illegible]jis[illegible]api[illegible]awwa[illegible]

Q[illegible]
A[illegible]RKSfluid[illegible]20[illegible]70[illegible]R[illegible]D[illegible]