RKSfluid®
A key Valve in Flow Control
Butterfly Valve
Ball Valve
Gate Valve
Globe Valve
Check Valve
Pipe Fittings

PTFE Butterfly Valve

BSEN 1092, DIN 2501, ANSI, JIS, AS2129
Size:DN50~DN600
Body:Ductile Iron
Disc:Ductile Iron+PTFE
Seat: PTFE
Connection: Wafer, Lug, Flange

PTFE Butterfly Valve

BSEN 1092, DIN 2501, ANSI, JIS, AS2129
Size: DN50~DN600
Body: Ductile Iron
Disc: Ductile Iron+PTFE
Seat: PTFE
Connection: Wafer, Lug, Flange

PTFE Butterfly Valve

BSEN 1092, DIN 2501, ANSI, JIS, AS2129
Size: DN50~DN600
Body: WCB, CF8, CF8M
Disc: CF8+PTFE, CF8M+PTFE
Seat: PTFE
Connection: Wafer, Lug

PTFE Butterfly Valve

BSEN 1092, DIN 2501, ANSI, JIS, AS2129
Size: DN50~DN600
Body: WCB, CF8, CF8M
Disc: CF8+PTFE, CF8M+PTFE
Seat: PTFE
Connection: Wafer, Lug

PTFE Butterfly Valve

BSEN 1092, DIN 2501, ANSI, JIS, AS2129
Size: DN50~DN600
Body: Ductile Iron
Disc: CF8 , CF8M
Seat: PTFE
Connection: Wafer, Lug, Flange

PTFE Butterfly Valve

BSEN 1092, DIN 2501, ANSI, JIS, AS2129
Size: DN50~DN600
Body: WCB
Disc: CF8 +PTFE, CF8 +PFA
Seat: PTFE
Connection: Wafer, Lug, Flange

Resilient seat butterfly valve

PN10/PN16, ANSI 125LB/150LB,5K/10K
Size:DN25-DN2400
Body:DI CI
Disc: Stainless steel
Seat :EPDM, NBR, Viton
Connection: Wafer, Lug, Flange

Resilient seat butterfly valve

PN10/PN16, ANSI 125LB/150LB,5K/10K
Size:DN25-DN2400
Body:DI CI
Disc: DI+ Nylon
Seat :EPDM, NBR, Viton
Connection: Wafer, Lug, Flange

Resilient seat butterfly valve

PN10/PN16, ANSI 125LB/150LB,5K/10K
Size:DN25-DN2400
Body:DI CI
Disc: Stainless steel
Seat :EPDM, NBR, Viton
Connection: Wafer, Lug, Flange

Resilient seat butterfly valve

PN10/PN16, ANSI 125LB/150LB,5K/10K
Size:DN25-DN2400
Body:DI CI
Disc: Stainless steel
Seat :EPDM, NBR, Viton
Connection: Wafer, Lug, Flange

Double flange resilient seat butterfly valve

PN10/PN16, ANSI 125LB/150LB, 5K/10K
Size:DN50-DN1000
Body:DI CI
Disc: Stainless steel
Seat :EPDM, NBR, Viton
Connection: Flange

Short-neck butterfly valve for petroleum

ANSI 125LB/150LB
Top Flange Standard:ISO5211
Size:2"-12"
Body: DI CI
Disc :Stainless Steel
Seat : EPDM, NBR, Viton
Connection:Wafer, Lug

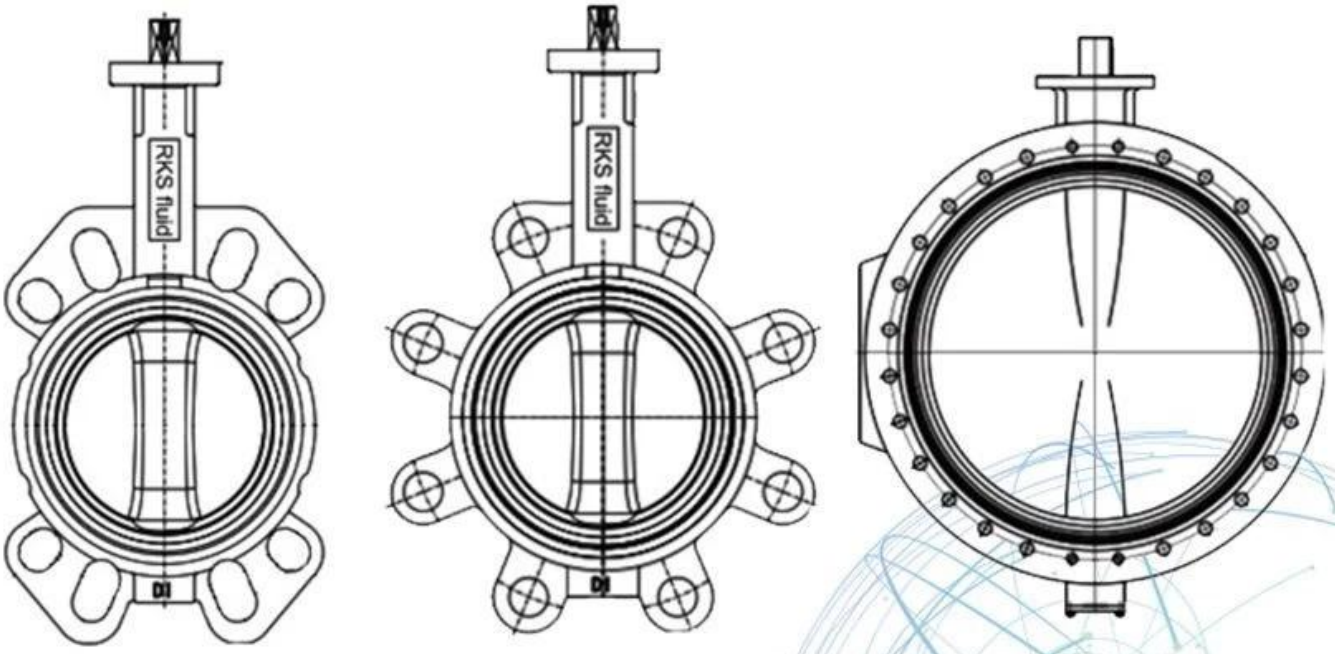

Application Scenario

Our Factory

Company Advantages

01 21 years of professional experience

02 4 factories

03 Independent research and development team
28 top senior professional researchers

04 2 professional testing centers

05 100% high level ex-factory inspection

06 High quality imported materials

07 2 years quality assurance, repair and replacement

RKSfluid□1997□□□□□□□□□□□□□□□□□□□□□□□□□□□□□□□□□□
□□□□□□□□□□□□□□□□□□□□
□□□□CNC□□□□□□□□□□□□□□□□□□□□□□□□□□□□□□□
□□□□□□□□□□□□□□□□□□□□□□□
□□
iao□□□□□□□□□□□□□□□□□□□□
□□□□□□□□□□□□□□□□□□
□□□□□□□□□□□□□□□□RKS□□□□□□□□
□□□□□□□□□□□□□□□□□□□□□□□□□□□□□□□□
□□□□GB□ISO□□□□□□□□□□□□TUV CE□□□ADWO-2000□□□□□□
ISO9001□TS□API□□□□□□□□□□□□□□□□□□□
□□□□□□□□□□□□□□□□□□□□□□□□□□□□□
□□
□□□□□□□□□□□□□□□□□□□□□□□□□□□□□□□□
□□□□□□□□□□□□□□□□□□□□□□□□□□□□□□□
□□□□□□□□□□□□□□□□□□□□□

□□□□□□□□□□□□□□□□□□□□□□

II□□□CNC□□□□□□□□□□□□□□□□□□□□□□□□□□□□□□□□□□□

III□□□□□□□□□□□□□□□□□□□□□□□□□

IV□□□□□□□□□□□□□□□□□□□□□□□□□

V□□□□GB□□□□□□□□□□□TUV CE□ISO 9001□ADWO-2000□TS□PED□WRC WRAS□KTW□API
6D□API609□

6□□/□□□/□□□□□□□□□□□□□□□□□

Exhibition Photos

Our Certificates

□□□□□□

Q□□□□□□□□□□□□□□□□□□□□□□□□□□
A□□□□□□□□□□□□□□□□□□□□□□□□□

Q□□□□□□□□□□□□□□□□□
A□□□□□□□□□□□□□□□□□□□□ RKSfluid□□□□□□□□□□□□□□□□□□□□□□□□□□□□□□□□□□□□

Q□□□□□□□□□□□□□□□
A□RKSfluid□□□□□□□□□□□□□□4□□□□□□□□□□

Q□□□□□□□□□
A□□□□□□□□2□5□□□□□□□□□□□□□□□□□□□□□□□□□□□

Q□MOQ
A□□□□□□□□1□□□□

Q□□□□□□□□□□□□
A□□□□□□□□100□□□□□□□□2□□□□□□□□□□□□□□□□□□□□□□□□□□□□□□
TUV□API□WRAS□CE□ISO□□□□□□□□□□
□□□□□□DIN□ASME□BS EN□JIS□API□AWWA□□□□□□□□□

Q□□□□□□□□□□□□□□□□□□□□□□□□□□□□□□
A□RKSfluid□□20□□□□□□□□70□□□□R&D□□□□□□□□□□□□□□□□□□□□□□□□□□□□□□□□□□