RKSfluid®

RKSfluid

RKSfluid®

RKSfluid

RKSfluid®

RKSfluid®

RKSfluid®

RKSfluid®

DESIGN FEATURES

DURABLE

- No-pin connection, 1 pc blow-out proof stem
- DI/CI Nodularity over 95%

ANTI-CORROSION

- Material: Epoxy powder: AkzoNobel, Earth Best!
- Coating Thickness: 200-250μm
- Spraying temp: over 200℃. Doesn't fade, even wipe with diethyl ether

QUALITY STANDARD

- 100% quality test, follow DIN, ASTM, JIS, GB/T, ISO, BS EN, API
- ONLY ONE Manufacturer get CE certification up to DN1800
- 2 years warranty. 15000 times On-off test, 30000 times Destructive experiment

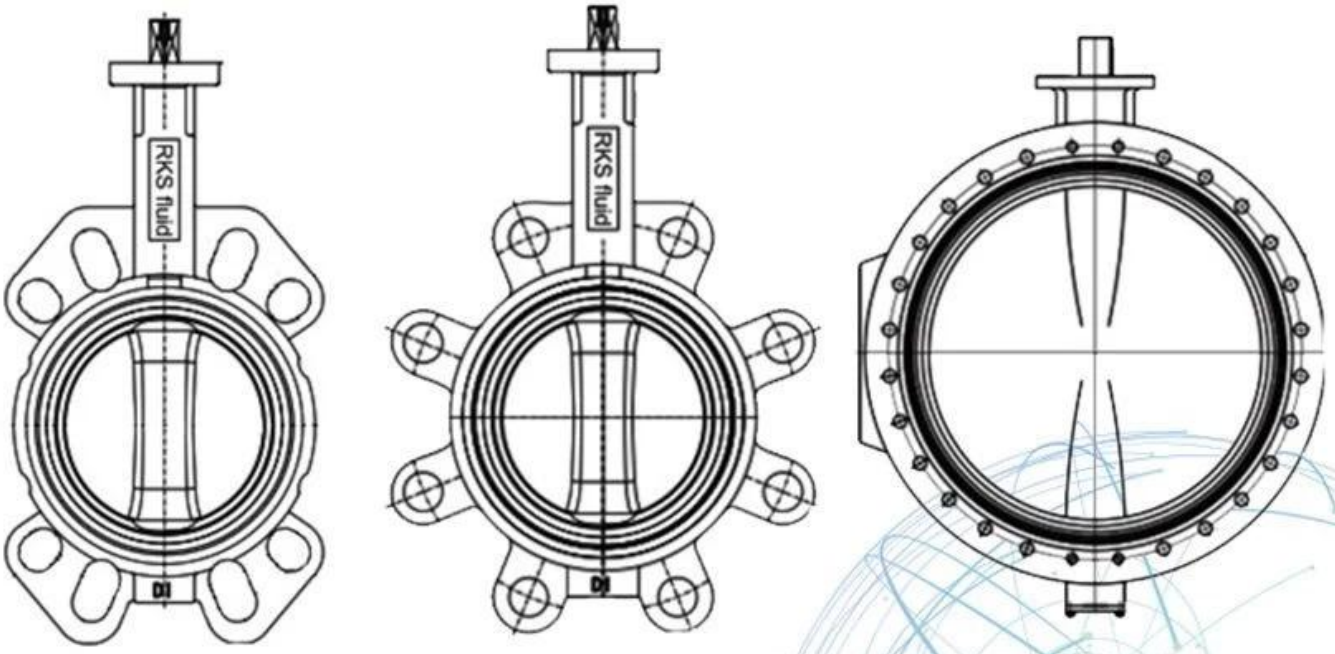

Application Scenario

I[illegible]

II[illegible]CNC[illegible]

III[illegible]

IV[illegible]

V[illegible]GB[illegible]TUV CE[illegible]ISO 9001[illegible]ADWO-2000[illegible]TS[illegible]PED[illegible]WRC WRAS[illegible]KTW[illegible]API 6D[illegible]API609[illegible]

VI[illegible]/[illegible]/[illegible]

Exhibition Photos

Our Certificates

RKSfluid
RKSfluid