[illegible]
[illegible]
[illegible] [illegible]
[illegible]100-1000mm[illegible]

[illegible]

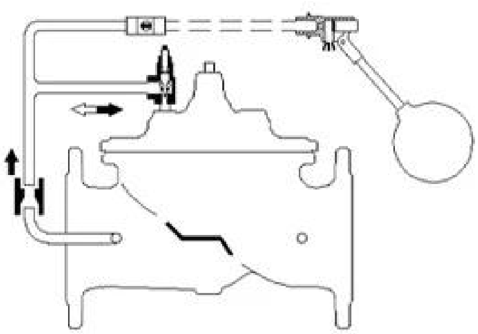

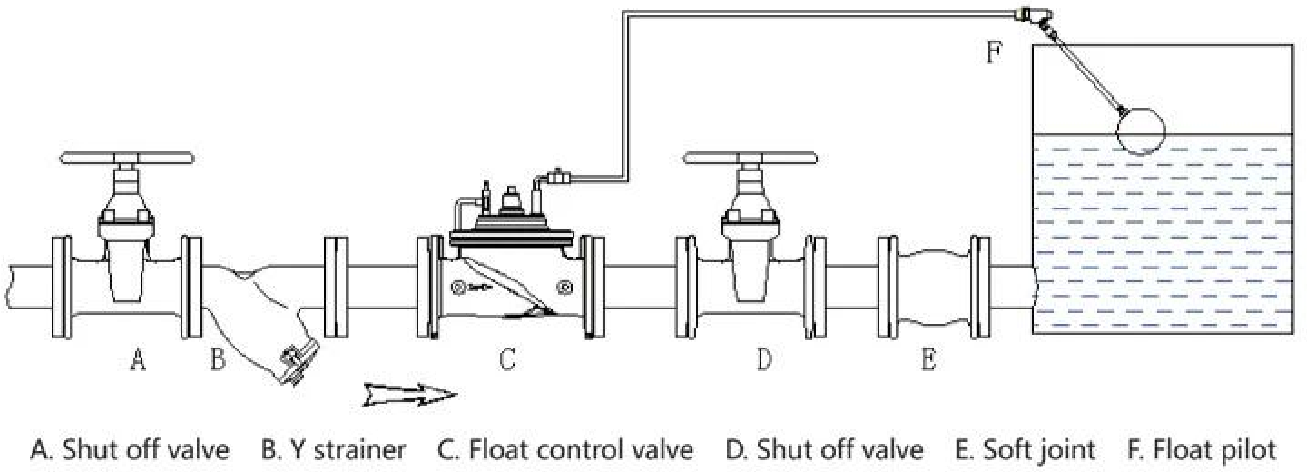


## [illegible]

1. [illegible];

2.[illegible]EN-GJS-500-7[illegible]

3. CF8/SUS304[illegible];

4.EPDM[illegible];

5. WRAS [illegible];

6.PN10/16/25

| DN | L | H | H1 | DN | L | H | H1 |
|---|---|---|---|---|---|---|---|
| 40 | 230 | 139 | 85 | 250 | 730 | 476 | 205 |
| 50 | 230 | 139 | 85 | 300 | 850 | 526 | 232 |
| 65 | 290 | 159 | 95 | 350 | 980 | 585 | 262 |
| 80 | 310 | 179 | 102 | 400 | 1100 | 624 | 292 |
| 100 | 350 | 214 | 112 | 500 | 1250 | 720 | 360 |
| 125 | 400 | 278 | 127 | 600 | 1450 | 835 | 424 |
| 150 | 480 | 233 | 145 | 800 | 1850□ | 1110 | 515 |
| 200 | 600 | 407 | 172 | 1000 | 2250 | 1350 | 630 |

**□□□□□:**

1. □□□□DN2mm□□□□□
2. □□□□□□□□□□□□□□□□
3. □□□□□□□□□□□□□□□□□□□□□□□□□□
4. 100□□□□□□□□□□□□64□□□□□□□□□□□

5. □□□□ (FB)□□□□□□□□ (RB)□□□□□□□□□□□□□□□□ (ACD)6□□□□□□□□□□□□□□□
6.1 □□□□□□: 1.1 * PN 1 Bar
6.2 □□□□: 1.5 * PN 1 Bar
6.3 □□□□□□□□: 0.2 Bar
7. 1000 Hz □□□□□□□□□□□□□□□□□□□□
8. □□□□□□□□□□□□□□□□□□□□□□□□□□□□ 9. □□□□□□□□□□□□□□□□□□□□□□

# COMPANY INFORMATION

Ⅰ [illegible]

Ⅱ [illegible] CNC [illegible] [illegible] [illegible]

Ⅲ [illegible]

Ⅳ [illegible]

Ⅴ [illegible]GB[illegible]TUV CE[illegible]ISO 9001[illegible]ADWO-2000[illegible]TS[illegible]PED[illegible]WRC WRAS[illegible]KTW[illegible]API 6D[illegible] API609[illegible]

Ⅵ [illegible]

## COMPANY FACTORY

01
21 years of professional experience
02
4 factories
03
Independent research and development team
28 top senior professional researchers
04
2 professional testing centers
05
100% high level ex-factory inspection
06
High quality imported materials
07
2 years quality assurance, repair and replacement

# COMPANY QUALIFICATION

## COMPANY EXHIBITION

## Partners

## □□□□□

**Q: □□□□□□□□□□□□□□□□□□□□□□?**
A□□□□□□□□□□□□□□□□□□□□□□□□□□□□

**Q: □□□□□□□□□□□□?**
□□: □□□□□□□□□□□□□ □□□□ RKSfluid □□□□□□□□□□□□□□□□□□□□□□□□□□□□□□□□□□

**Q: □□□□□□□□□□□□□□□□?**
□□: RKSfluid □□4□□□□□□□□□□□□□□□□□□□□□□□□□

**Q: □□□□□□□**
A□□□□□□2□5□□□□□□□□□□□□□□□□□□□□□□□□□□□□□

**□□: MOQ**
□□: □□□□□□ 1 □□

**Q□□□□□□□□□□□□□□**
□□: □□□□ 100% □□□□□2 □□□□□□□□□□□□□□□□□□□□□
TUV□API□WRAS□CE□ISO□□□□□□□□□
□□□DIN□ASME□BS EN□JIS□API□AWWA□□□□

**Q: □□□□□□□□□□□□□□□□□□□□□□□□?**
A: RKSfluid □□□ 20 □□□□ 70 □□□□□□□□□□□□□□□□□□□□□□□□□□□□□□□□□□□□□□□□□