## DESIGN FEATURES

### DURABLE

- No-pin connection, 1 pc blow-out proof stem
- DI/CI Nodularity over 95%

### ANTI-CORROSION

- Material: Epoxy powder: AkzoNobel, Earth Best!
- Coating Thickness: 200-250μm
- Spraying temp: over 200℃. Doesn't fade, even wipe with diethyl ether

### QUALITY STANDARD

- 100% quality test, follow DIN, ASTM, JIS, GB/T, ISO, BS EN, API
- ONLY ONE Manufacturer get CE certification up to DN1800
- 2 years warranty. 15000 times On-off test, 30000 times Destructive experiment

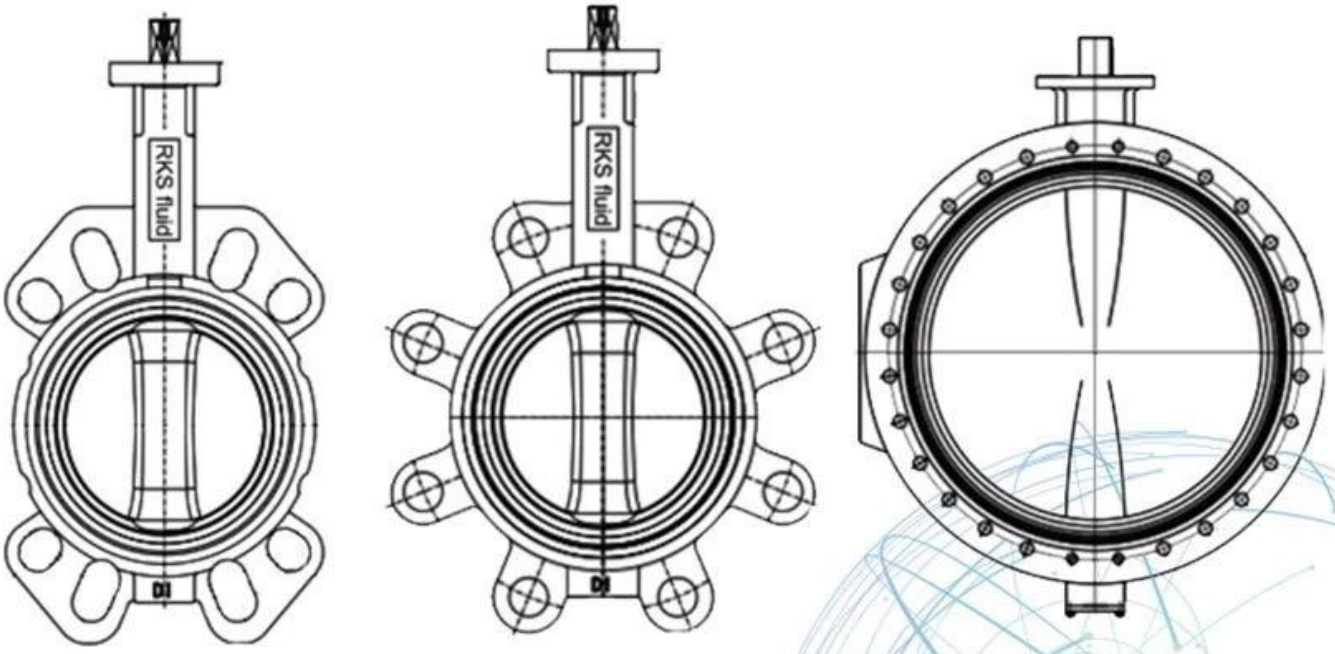


## Application Scenario

# Our Factory

## Company Advantages

01 21 years of professional experience

02 4 factories

03 Independent research and development team
28 top senior professional researchers

04 2 professional testing centers

05 100% high level ex-factory inspection

06 High quality imported materials

07 2 years quality assurance, repair and replacement

◎□□□□□□□□□□□□□□□□□□□□

✓□□□CNC□□□□□□□□□□□□□□□□□□□□□□□□□□□□□□□□□□□□□□

✓□□□□□□□□□□□□□□□□□□□□□□□□□□□□□□□□

✓□□□□□□□□□□□□□□□□□□□□□□□□□□□□□□□

✓□□□□GB□□□□□□□□□□□□□□□□□□TUV CE□ISO 9001□ADWO-2000□TS□PED□WRC WRAS□KTW□API 6D□API609□

VI□□□□□□□□□□□□□□□□□□□□□□□□□□□□□□□□□□□□□□□□□□□□□□□□□/□□/□□□□□□□□□□□□□□□

□□□□□

Q□□□□□□□□□□□□□□□□□□□□□
A□□□□□□□□□□□□□□□□□□□□

Q□□□□□□□□□□□□□□□□□□□□□□□□□
A□□□□□□□HRRAULIC□□□□□□□□ RKSfluid□□□□□□□□□□□□□□□□□□□□□□□□□□□□□□□□□□□□
□□□□□□

Q□□□□□□□□□□□□□□
A□RKSfluid□□□□□□□□□□□□4□□□□□□□□□□

Q□□□□□□□□
A□□□□□□2~5□□□□□□□□□□□□□□□□□□□□□□□□□□□□

Q□MOQ.
A□□□□□□□1□□□

Q□□□□□□□□□□□
A□□□□100□□□□□□□2□□□□□□□□□□□□□□□□□□□□□□
□□□□TUV□API□WRAS□CE□ISO□□□□□□□
□□□DIN□ASME□BS EN□JIS□API□AWWA□□□□□□□□

Q□□□□□□□□□□□□□□□□□□□□□□□
A□RKSfluid□20□□□□70□□□□□□□□□□□□□□□□□□□□□□□□□□□□□□□□□□□□□□□□□□□□□