[illegible]0～80℃[illegible]
[illegible]

[illegible]NBR/EPDM [illegible] NBR/EPDM [illegible]
[illegible]

[illegible]	JPRM1171
[illegible]	JPRM1092-2
[illegible]	DIN 12266-1
[illegible]	[illegible]
[illegible]	[illegible]
[illegible]	0～80℃
[illegible] [illegible]	11/18[illegible]
[illegible] [illegible]	15/24[illegible]
[illegible]	PN10/16
[illegible]	DN40～DN500
[illegible]	[illegible]

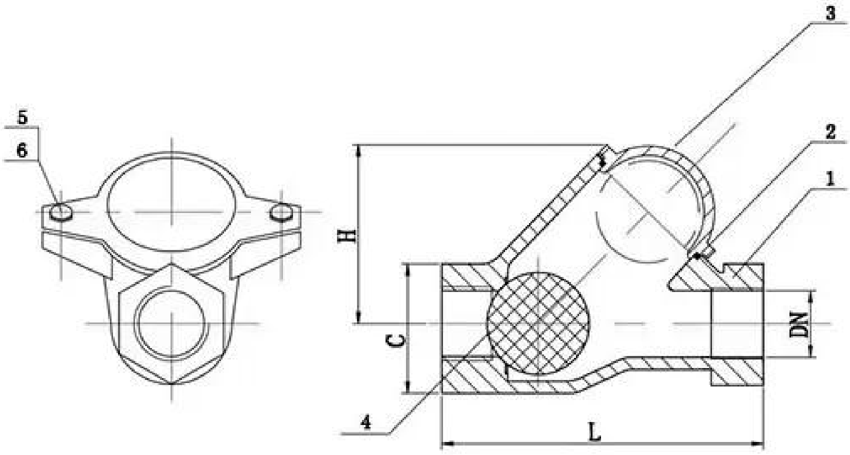

[illegible]	[illegible]	[illegible]
1	[illegible]	GGG25/GGG40
2	[illegible]	NBR/EPDM
3	[illegible]	GGG25/GGG40
4	[illegible]	NBR/EPDM
5	[illegible]	[illegible]
6	[illegible]	[illegible]

DN(mm)	25	32	40	50	65	80
[illegible](mm)	125	132	145	174	200	243
[illegible]	75	75	85	126	113	165

COMPANY INFORMATION

I [illegible]

Ⅱ [illegible] CNC [illegible] [illegible] [illegible]

Ⅲ [illegible]

Ⅳ [illegible]

V [illegible]GB[illegible]TUV CE[illegible]ISO 9001[illegible]ADWO-2000[illegible]TS[illegible]PED[illegible]WRC WRAS[illegible]KTW[illegible]API 6D[illegible]
API609[illegible]

VI [illegible]/[illegible]/[illegible]

COMPANY FACTORY

SHIPPING PACKAGING

01 21 years of professional experience

02 4 factories

03 Independent research and development team
28 top senior professional researchers

04 2 professional testing centers

05 100% high level ex-factory inspection

06 High quality imported materials

07 2 years quality assurance, repair and replacement

COMPANY QUALIFICATION

COMPANY EXHIBITION

Partners

□□□□□

Q: □□□□□□□□□□□□□□□□□□□□□□□□□□□□□?
A□□□□□□□□□□□□□□□□□□□□□□□□□□□□□□□□

Q: □□□□□□□□□□□□□□?
□□: □□□□□□□□□□□□□□□ □□□□ RKSfluid □□□□□□□□□□□□□□□□□□□□□□□□□□□□□□□□□□□□□□□

Q: □□□□□□□□□□□□□□□□□□?
□□: RKSfluid □□4□□□□□□□□□□□□□□□□□□□□□□□□□□□□

Q: □□□□□□□□
A□□□□□□2□5□□□□□□□□□□□□□□□□□□□□□□□□□□□□□□

□□: MOQ
□□: □□□□□□□ 1 □□

Q□□□□□□□□□□□□□□□□□
□□: □□□□ 100% □□□□□2 □□□□□□□□□□□□□□□□□□□□□□□□□
TUV□API□WRAS□CE□ISO□□□□□□□□□□
□□□DIN□ASME□BS EN□JIS□API□AWWA□□□□

Q: □□□□□□□□□□□□□□□□□□□□□□□□□□□□□□□?
A: RKSfluid □□□ 20 □□□□□ 70 □□□