DESIGN FEATURES

TECHNICAL REQUIREMENT

1.Design standard:BS 5163.
2.Face to face:BS 5163.
3.Flanges standard:BS EN1092-2:1997 PN16.
4.Test standard:BS EN12266-1 Rate B.

FEATURES

- Double flange metal seated gate valve
- Size Range:DN50-DN2000
- Standard-ISO/BS/DIN/AWWA/API
- Tests Standard-BS EN 12266-1
- Body Ring-Bronze/SS420/SS304/SS316
- Body-Ductile Iron /Cast Iron/Stainless Steel /WCB
- Fusion bonded epoxy coating-min 300 microns

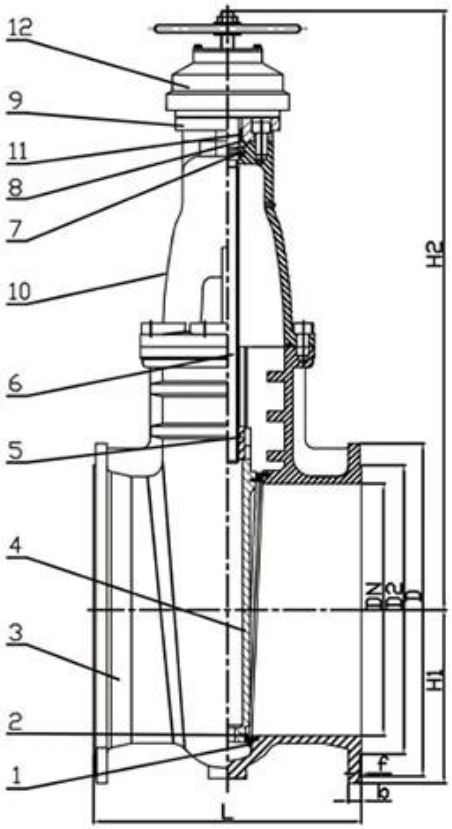

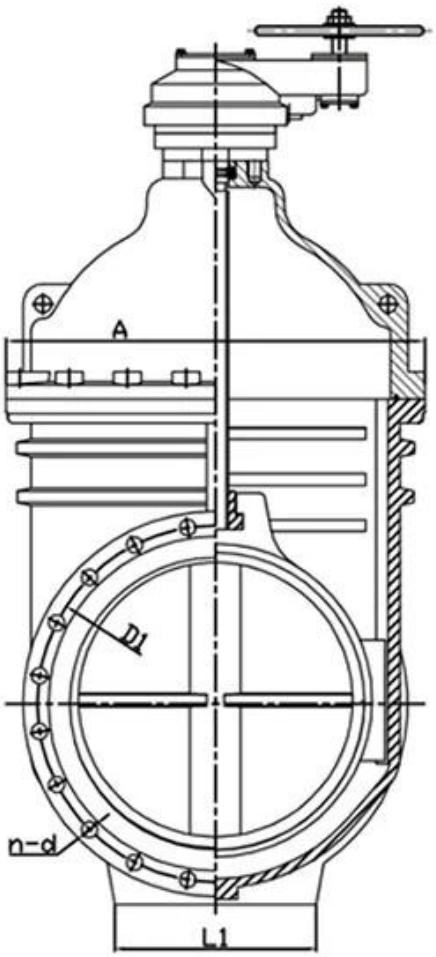

RELATED PRODUCTS

SMALL DIAMETER GATE VALVE
DN50-DN300,PN10/16/25

METAL SEATED GATE VALVE
DN350-DN600,PN10/16/25

LARGE DIAMETER
METAL SEATED GATE VALVE
DN700-DN2000,PN10/16/25

APPLICATION SCENARIO

Industrial water application | Power plant | Sea water desalination | Water treatment | Water supply and drainage | HAVC | Food and drug | Water transport

COMPANY FACTORY

COMPANY INFORMATION

RKS Fluid[illegible]1997[illegible]CNC[illegible]GB[illegible]RKS[illegible]CE[illegible]ADWO-2000[illegible]ISO9001[illegible]TS[illegible]API[illegible]TUV[illegible]GB[illegible]ISO[illegible]ISO[illegible]

01
21 years of professional experience
02
4 factories
03
Independent research and development team
28 top senior professional researchers
04
2 professional testing centers
05
100% high level ex-factory inspection
06
High quality imported materials
07
2 years quality assurance, repair and replacement

COMPANY QUALIFICATION

COMPANY EXHIBITION

□□□□□□□

Q□□□□□□□□□□□□□□□□□□□□□□□□
A□□□□□□□□□□□□□□□□□□□□□□□□□□□□□□□

Q□□□□□□□□□□□□□□□□□□
A□□□□□□□□hrdraulic□□□□□□□□□□□RKSfluid□□□□□□□□□USA□□□□□□□□□□□□□□□□□□□□□□□□□□□□□□□

Q□□□□□□□□□□□□□□□□
A□RKSfluid□□□□□□□□□□□□□□□4□□□□□□□□□□□

Q□□□□□□□□□
A□□□□□□□□2□5□□□□□□□□□□□□□□□□□□□□□□□□□□□□□□□□□□□□□

Q□Moq
A□□□□□□□□1PC□

Q□□□□□□□□□□□□
A□□□□□100□□□□□□□2□□□□□□□□□□□□□□□□□□□□□□
TUV□API□WRA□CE□ISO□□□□□□□□□□
□□din□asme□bs en□jis□api□awwa□□□□□□□□□

Q□□□□□□□□□□□□□□□□□□□□□□□□□□□□□□
A□RKSfluid□□□20□□□□□70□□□□R□D□□□