RKSfluid®
A key Valve in Flow Control
Butterfly Valve
Ball Valve
Gate Valve
Globe Valve
Check Valve
Pipe Fittings

DESIGN FEATURES

- **Elastic** stainless steel sealing ring, **"0" leakage**
- **Fireproof** structural design, **blow-out proof** stems
- Double-arc incision design: **reduce flow rate** during on-off, **reduce the erosion damage**, long life
- Double seal surface design: **reduce the torque**
- **Scraper structure** design: scratch off ball surface
- **Unique universal joint** design: reduce torque, on-off smoothly, long life

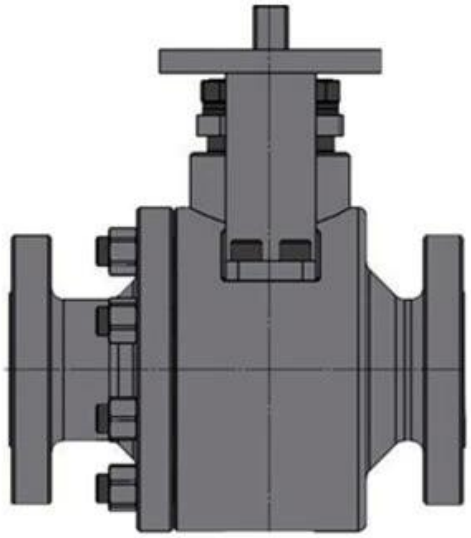

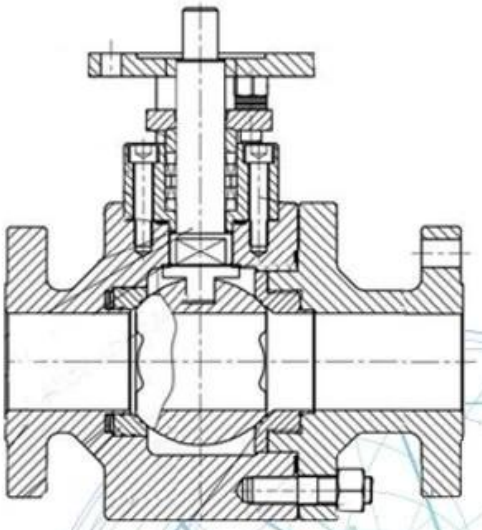

APPLICATION SCENARIO

Industrial water application | Power plant | Petroleum | Steel | Wastewater treatment | Acid-base | Healing drugs | Refined coal

Our Factory

Ⅰ□□□□□□□□□□□□□□□□□□□□□□□□

Ⅱ□□□CNC□□□

Ⅲ□□□□□□□□□□□□□□□□□□□□□□□□□□□□□□

Ⅳ□□□□□□□□□□□□□□□□□□□□□□□□□□□□□□□

V□□□□GB□□□□□□□□□□□□□□TUV CE□ISO 9001□ADWO-2000□TS□PED□WRC WRAS□KTW□API 6D□API 609□

VI□□/□□□/□□□□□□□□□□□□□□□□□□

Exhibition Photos

Our Certificates

□□□□□

Q□□□□□□□□□□□□□□□□□□□□
A□□□□□□□□□□□□□□□□□□□

Q□□□□□□□□□□□□□□□□□□
A□□□□□□□□□□□□□□ RKSfluid□□□□□□□□□□□□□□□□□□□□□□□□□□

Q□□□□□□□□□
A□RKSfluid□□□□□□□□□□□□4□□□□□□□□□

Q□□□□□□□□
A□□□□□□2□5□□□□□□□□□□□□□□□□□□□□□□□□□□□

Q□MOQ
A□□□□□□1□□

Q□□□□□□□□□□
A□□□□□100□□□□□□□□2□□□□□□□□□□□□□□□□□□□
　□□TUV□API□WRAS□□□□□ISO□□□□□□□□
　□□DIN□ASME□BS EN□JIS□API□AWWA□□□□□□□□

Q□□□□□□□□□□□□□□□□□□□□□□□□
A□RKSfluid□20□□□□□□□□70□□□