Air Release valve

Size range:DN25-DN300
Pressure ratings:PN10 PN16
Body:Ductile Iron
Trim:SS304 SS316 etc
Connection:ARVS/KARS-BPT threaded, KARX-Flanged
Working temperature: -10°C~+80°C

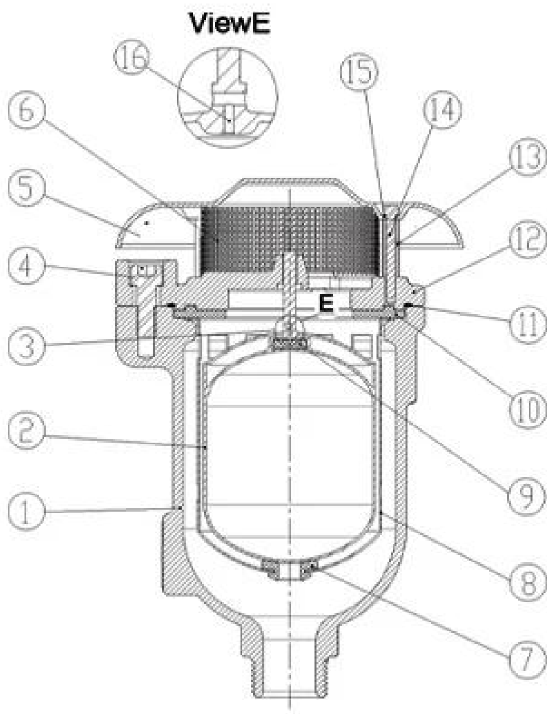

DN25-DN50

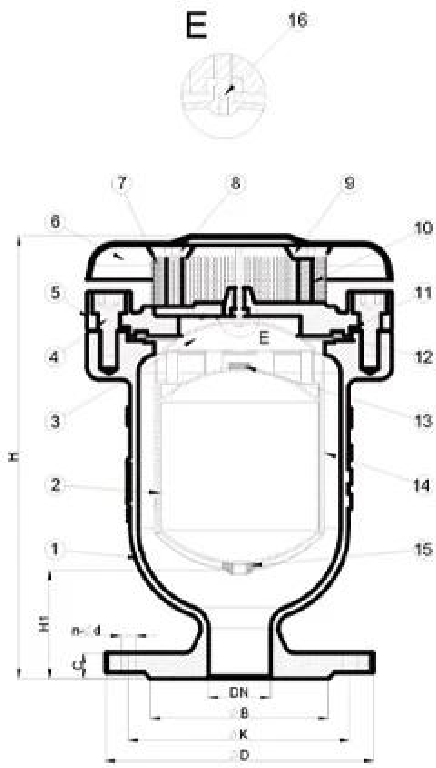

DN50-DN300

[illegible]

1.[illegible] 2.[illegible] 3.[illegible] 4.[illegible] 5.comply bs en 1074-4

COMPANY INFORMATION

RKSfluid□1997□□CNC□□□□□□□□□□□□□□□□□□□□□□□□□□□□
□□
□□□□□□□□□□□□□□□□□□□□□GB□□RKS□□
□□□□□□□□□□□□□□□□□□□□□□□□□□□□□□□□□□□□□□

□□□□□□□□□□□GB□ISO□□□□□□□□□□□□CE□□□ADWO-2000□TUV□□□□□□□□□ISO9001□TS□API□
□□□
□□
□□
□□□□□□□□□□□□□□□□□□

i□□□□□□□□□□□□□□□□□□□□□□□

divanced Advanced CNC□□□□□□□□□□□□□□□□□□□□□□□□□□□□□□□□□□□

relaved□□□□□□□□□□□□□□□□□□□□□□□□□□□□□□□□□□

us□□□□□□□□□□□□□□□□□□□□□□□□□□□□□

inude□□□□GB□□□□□□□□□□□□□TUV CE□ISO 9001□ADWO-2000□TS□PED□WRC WRA□KTW□API 6D□API609□

VI□□ /□□□ /□□□□□□□□□□□□□□□□

01
21 years of professional experience
02
4 factories
03
Independent research and development team
28 top senior professional researchers
04
2 professional testing centers
05
100% high level ex-factory inspection
06
High quality imported materials
07
2 years quality assurance, repair and replacement

COMPANY QUALIFICATION

COMPANY EXHIBITION

□□□□□□□

Q□□□□□□□□□□□□□□□□□□□□□□□

A□□□□□□□□□□□□□□□□□□□□□□□□□□□□□□

Q□□□□□□□□□□□□□□□□□□

A□□□□□□□□hrdraulic□□□□□□□□□□RKSfluid□□□□□□□□USA□□□□□□□□□□□□□□□□□□□□□□□□□□□□□

Q□□□□□□□□□□□□□□□

A□RKSfluid□□□□□□□□□□□□□□4□□□□□□□□□□

Q□□□□□□□□□

A□□□□□□□□2□5□□□□□□□□□□□□□□□□□□□□□□□□□□□□□□□□□□□□

Q□Moq

A□□□□□□□□1PC□

Q□□□□□□□□□□□□

A□□□□100□□□□□□□□□2□□□□□□□□□□□□□□□□□□□□□□

TUV□API□WRA□CE□ISO□□□□□□□□□□

□□din□asme□bs en□jis□api□awwa□□□□□□□□□

Q□□□□□□□□□□□□□□□□□□□□□□□□□□□□

A□RKSfluid□□□20□□□□□□70□□□R□D□□□