DESIGN FEATURES

DURABLE

- No-pin connection,1 pc blow-out proof stem
- DI/CI Nodularity over 95%

ANTI-CORROSION

- Material: Epoxy powder: AkzoNobel Earth Best!
- Coating Thickness:200-250μm
- Spraying temp: over 200°C. Doesn't fade, even wipe with diethyl ether

QUALITY STANDARD

- 100% quality test, follow DIN, ASTM, JIS, GB/T, ISO, BS EN, API
- ONLY ONE Manufacturer get CE certification up to DN1800
- 2 years warranty.15000 times On-off test,30000 times Destructive experiment

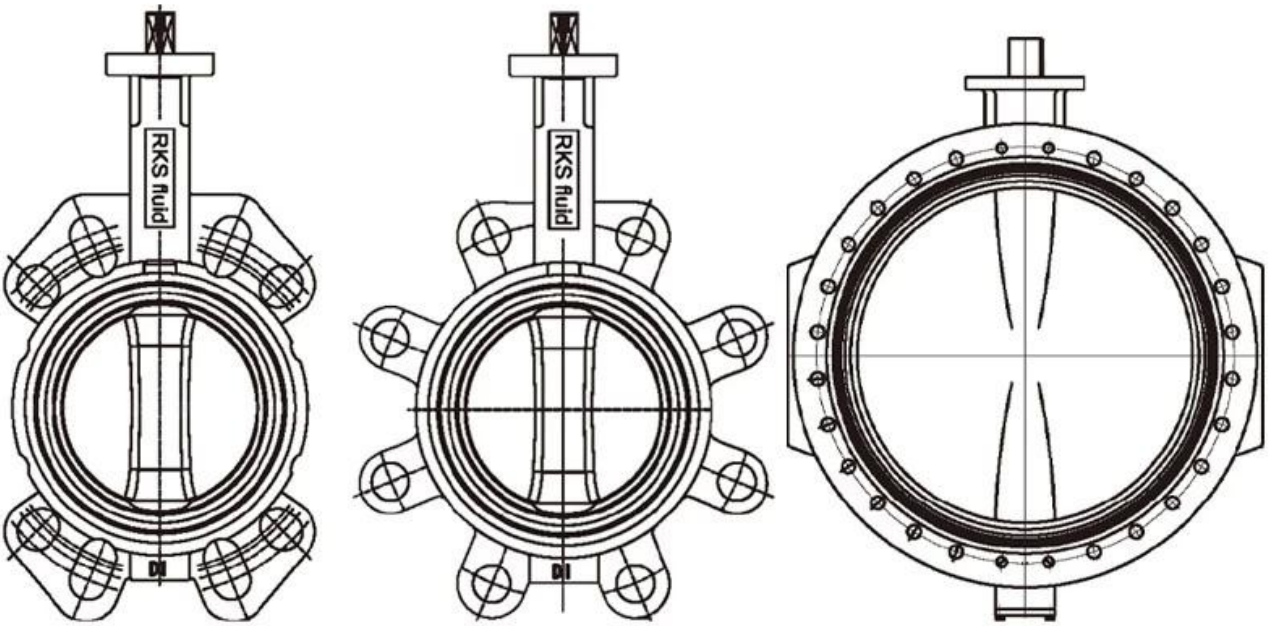

APPLICATION SCENARIO

Industrial water application | Power plant | Sea water desalination | Water treatment | Water supply and drainage | HAVC | Food and drug | Water transport

COMPANY FACTORY

COMPANY INFORMATION

i[illegible]

divanced Advanced CNC[illegible]

relaved[illegible]

us[illegible]

inude[illegible]GB[illegible]TUV CE[illegible]ISO 9001[illegible]ADWO-2000[illegible]TS[illegible]PED[illegible]WRC WRA[illegible]KTW[illegible]API 6D[illegible]API609[illegible]

VI[illegible] [illegible] [illegible]/[illegible]/[illegible]

01 21 years of professional experience

02 4 factories

03 Independent research and development team
28 top senior professional researchers

04 2 professional testing centers

05 100% high level ex-factory inspection

06 High quality imported materials

07 2 years quality assurance, repair and replacement

COMPANY QUALIFICATION

COMPANY EXHIBITION

□□□□□□□

Q□□□□□□□□□□□□□□□□□□□□□□□□□
A□□□□□□□□□□□□□□□□□□□□□□□□□□□□□□□□

Q□□□□□□□□□□□□□□□□□□
A□□□□□□□□hrdraulic□□□□□□□□□□□ RKSfluid□□□□□□□□USA□□□□□□□□□□□□□□□□□□□□□□□□□□□□□□

Q□□□□□□□□□□□□□□□
A□RKSfluid□□□□□□□□□□□□□□□□4□□□□□□□□□□

Q□□□□□□□□□
A□□□□□□□□2□5□□□□□□□□□□□□□□□□□□□□□□□□□□□□□□□□□□□□□

Q□Moq
A□□□□□□□□1PC□

Q□□□□□□□□□□□□
A□□□□□100□□□□□□□2□□□□□□□□□□□□□□□□□□□□□□□
TUV□API□WRA□CE□ISO□□□□□□□□□□
□□din□asme□bs en□jis□api□awwa□□□□□□□□□

Q□□□□□□□□□□□□□□□□□□□□□□□□□□□□
A□RKSfluid□□□20□□□□□70□□□□R□D□□□