DESIGN FEATURES

- **Elastic** stainless steel sealing ring, **"0" leakage**
- **Fireproof** structural design, **blow-out proof** stems
- **Auto** welding **plasma powder** surfacing valve seat
- **Hollow** design, **reduces** flow resistance
- Interchangeable **DSS entity seal / multiple-piece stainless and graphite seal**
- **ISO5211** Mounting platform, simple connection

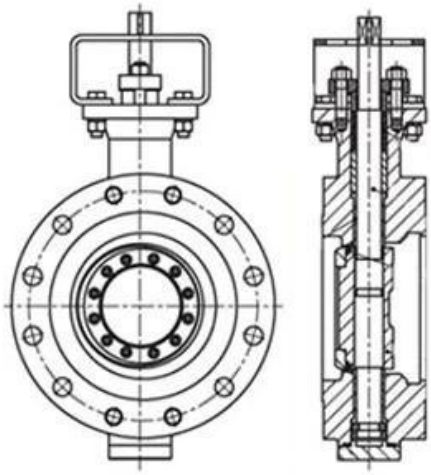

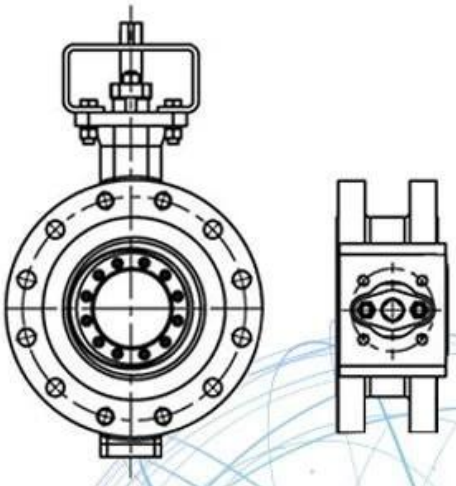

Application Scenario

Our Factory

i□□□□□□□□□□□□□□□□□□□□□□□□

divanced Advanced CNC□□

relaved□□□□□□□□□□□□□□□□□□□□□□□□□□□□□□□□□□□

us□□□□□□□□□□□□□□□□□□□□□□□□□□□□□□

inude□□□□□GB□□□□□□□□□□□□□TUV CE□ISO 9001□ADWO-2000□TS□PED□WRC WRA□KTW□API 6D□API609□

VI□□/□□□/□□□□□□□
□□□□□□□□□□□□

Exhibition Photos
RKSfluid

Our Certificates
Real
Certificate
Zertifikat
WRAS
CERTIFICATE

□□□□□□

Q[illegible]
A[illegible]

Q[illegible]
A[illegible]hrdraulic[illegible] RKSfluid[illegible]USA[illegible]

Q[illegible]
A[illegible]RKSfluid[illegible]4[illegible]

Q[illegible]
A[illegible]2[illegible]5[illegible]

Q[illegible]Moq
A[illegible]1PC[illegible]

Q[illegible]
A[illegible]100[illegible]2[illegible]
TUV[illegible]API[illegible]WRA[illegible]CE[illegible]ISO[illegible]
[illegible]din[illegible]asme[illegible]bs en[illegible]jis[illegible]api[illegible]awwa[illegible]

Q[illegible]
A[illegible]RKSfluid[illegible]20[illegible]70[illegible]R[illegible]D[illegible]