□□□□□□□□□□□□□□□□□□□□□□□□□□□□□□ □□□□□□□□□□□□□□
□□□ D20E □□□□□□□□□□□□□□□□□□□□

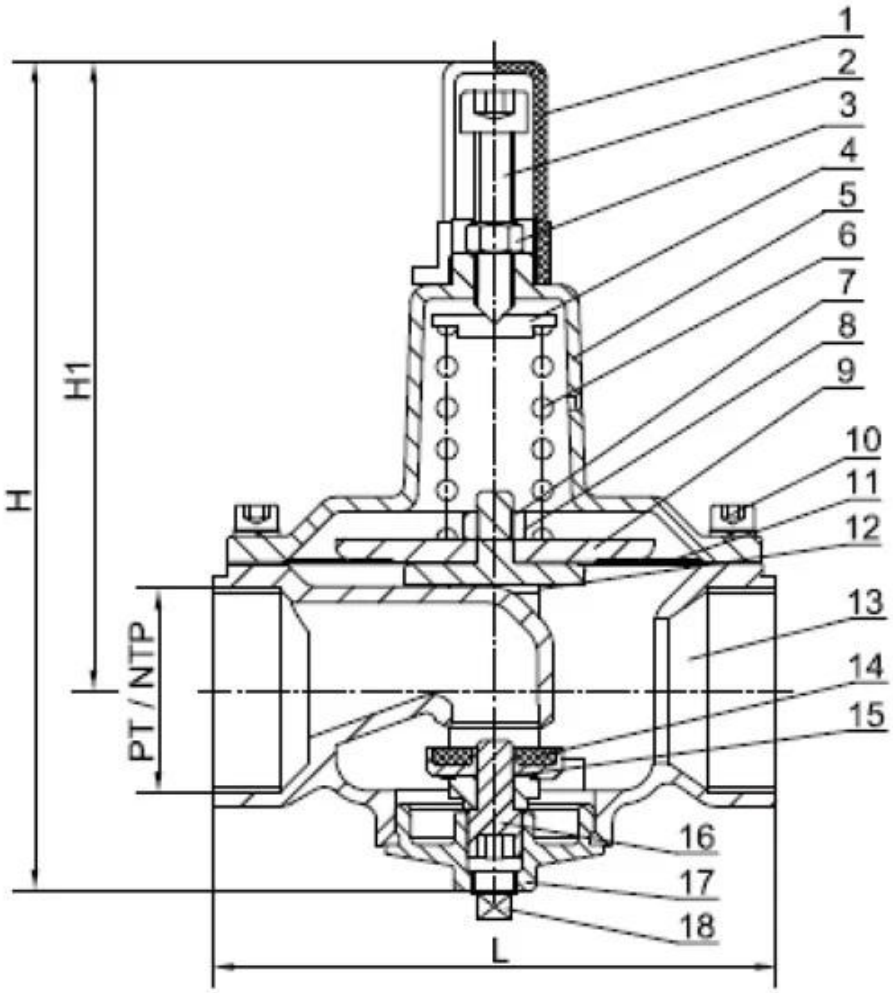
1
2
3
4
5
6
7
8
9
10
11
12
13
14
15
16
17
18
H
H1
PT / NTP
L

COMPANY INFORMATION

I □□□□□□□□□□□□□□□□□□□□□□□□□□□□□□

II □□□□ CNC □□□□□ □□□□□□□□□□□□□□□□□□□□□□□□ □□

III □□□□□□□□□□□□□□□□□□□□

COMPANY QUALIFICATION

COMPANY EXHIBITION

Partners

Delivery

Payment

□□□□□□
Q: □□□□□□□□□□□□□□□□□□□□□□□□□□□□□?
A□□□□□□□□□□□□□□□□□□□