RKSfluid®
A key Valve in Flow Control
Butterfly Valve
Ball Valve
Gate Valve
Globe Valve
Check Valve
Pipe Fittings

DESIGN FEATURES

- **Elastic** stainless steel sealing ring, **"0" leakage**
- **Fireproof** structural design, **blow-out proof** stems
- Double-arc incision design: **reduce flow rate** during on-off, **reduce the erosion damage**, long life
- Double seal surface design: **reduce the torque**
- **Scraper structure** design: scratch off ball surface
- **Unique universal joint** design: reduce torque, on-off smoothly, long life

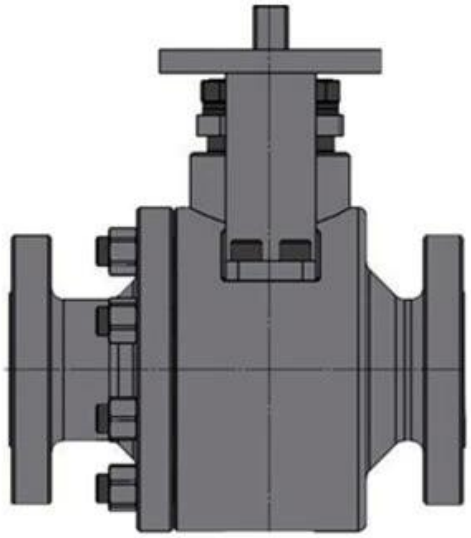

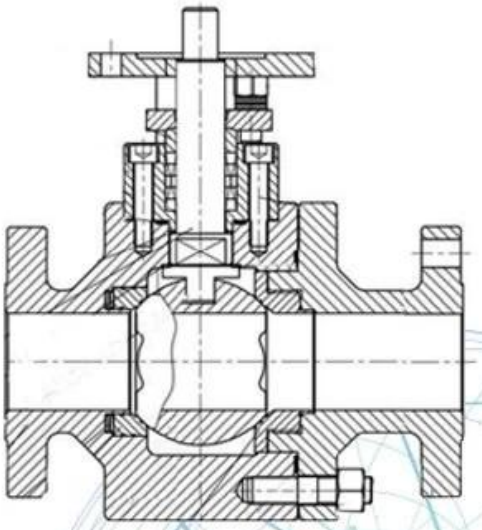

Application Scenario

Industrial water application | Power plant | Petroleum | Steel | Wastewater treatment | Acid-base | Healing drugs | Refined coal

Our Factory

I□□□□□□□□□□□□□□□□□□□□□□□□□□

IICNC□□

III□□□□□□□□□□□□□□□□□□□□□□□□□□□□□□□□□□

IV□□□□□□□□□□□□□□□□□□□□□□□□□□□□□□□

V□□□□□GB□□□□□□□□□□□□□□TUV CE□ISO 9001□ADWO-2000□TS□PED□WRC WRAS□KTW□API 6D□API609

VI□□/□□□/□□□□□□□□□□□□□□□□□

Exhibition Photos
RKSfluid
RKSfluid®

Our Certificates
Real
Certificate
Zertifikat
WRAS
CERTIFICATE

□□□□□

Q[illegible]
A[illegible]

Q[illegible]
A[illegible] RKSfluid[illegible]

Q[illegible]
A[illegible]RKSfluid[illegible]4[illegible]

Q[illegible]
A[illegible]2[illegible]5[illegible]

Q[illegible]MOQ
A[illegible]1[illegible]

Q[illegible]
A[illegible]100[illegible]2[illegible]
TUV[illegible]API[illegible]WRAS[illegible]CE[illegible]ISO[illegible]
DIN[illegible]ASME[illegible]BS EN[illegible]JIS[illegible]API[illegible]AWWA[illegible]

Q[illegible]
A[illegible]RKSfluid[illegible]20[illegible]70[illegible]R& D[illegible]