RKSfluid®
A key Valve in Flow Control
Butterfly Valve
Ball Valve
Gate Valve
Globe Valve
Check Valve
Pipe Fittings

DESIGN FEATURES

- **Elastic** stainless steel sealing ring, **"0" leakage**
- **Fireproof** structural design, **blow-out proof** stems
- **Auto** welding **plasma powder** surfacing valve seat
- **Hollow** design, **reduces** flow resistance
- Interchangeable **DSS entity seal / multiple-piece stainless and graphite seal**
- **ISO5211** Mounting platform, simple connection

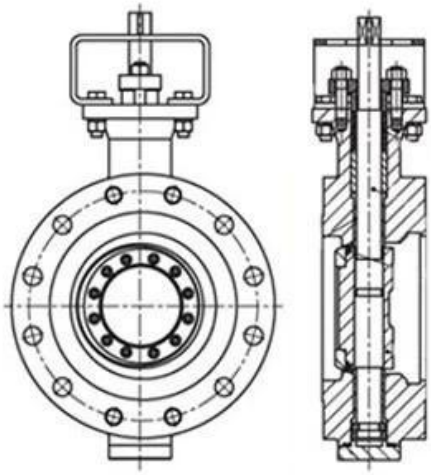

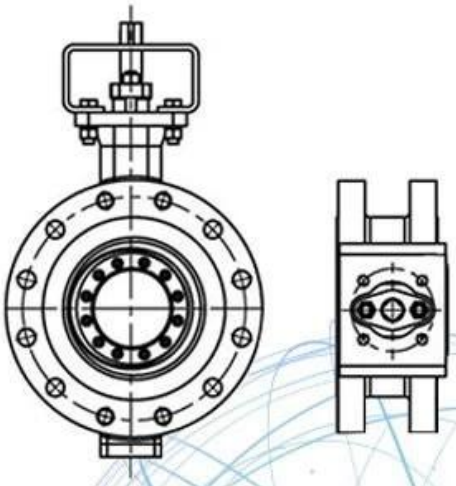

Application Scenario

Our Factory

◎□□□□□□□□□□□□□□□□□□□□

✓□□□CNC□□

✓□□□□□□□□□□□□□□□□□□□□□□□□□□□□□

✓□□□□□□□□□□□□□□□□□□□□□□□□□□□□

✓□□□□GB□□□□□□□□□□□□□□□TUV CE□ISO 9001□ADWO-2000□TS□PED□WRC
WRAS□KTW□API 6D□API609□

VI□□/□□/□□□□□□□□□□□□□□

Exhibition Photos
RKSfluid

Our Certificates
Real
Certificate
Zertifikat
WRAS
CERTIFICATE

□□□□□

Q[illegible]

A[illegible]

Q[illegible]

A[illegible]HRRAULIC[illegible] RKSfluid[illegible]

Q[illegible]

A[illegible]RKSfluid[illegible]4[illegible]

Q[illegible]

A[illegible]2~5[illegible]

Q[illegible]MOQ

A[illegible]1[illegible]

Q[illegible]

A[illegible]100[illegible]2[illegible]
[illegible]TUV[illegible]API[illegible]WRAS[illegible]CE[illegible]ISO[illegible]
[illegible]DIN[illegible]ASME[illegible]BS EN[illegible]JIS[illegible]API[illegible]AWWA[illegible]

Q[illegible]

A[illegible]RKSfluid[illegible]20[illegible]70[illegible]