- Streamlined, minimum noise
- Backflow velocity only 0.2s, Head loss 0.1bar with 2m/s
- EPDM/NBR Rubber fully coated disc
- Anti-erosion design, Self-adjusting ball
- Self-cleaning stem, Long time smooth operation

Engineering Projects

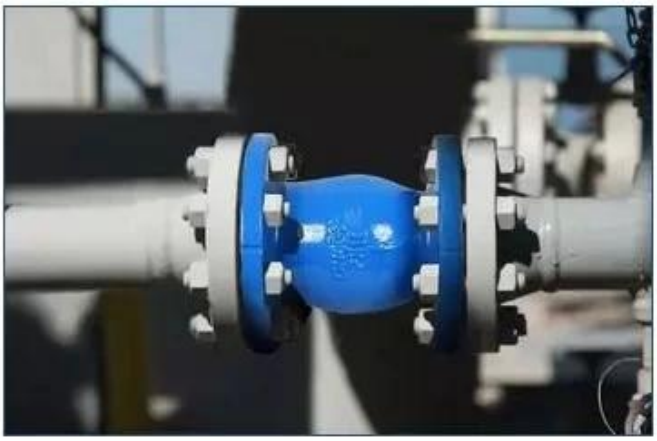

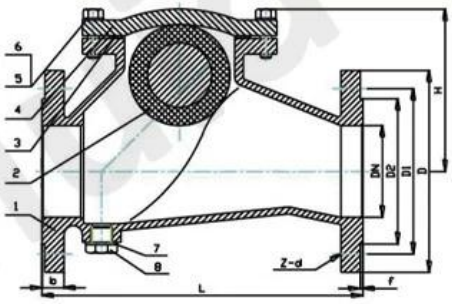

Ball Check Valve, Flange

ITEM	PART NAME	MATERIAL
1	Body	Ductile iron
2	Ball	NBR
3	Gasket	NBR
4	Body	Ductile iron
5	Bolt	SS304
6	Washer	SS304
7	Washer	Nylon
8	Plug	SS304

SIZE	DIN 3202 F6	Flange dimension(EN 1092-2) PN10/PN16		
DN	L	D	K	n-d
DN40/1.5"	180	150	110	4-ø19
DN50/2"	200	165	125	4-ø19
DN65/2.5"	240	185	145	4-ø19
DN80/3"	260	200	160	8-ø19
DN100/4"	300	220	180	8-ø19
DN125/5"	350	250	210	8-ø19
DN150/6"	400	285	240	8-ø23
DN200/8"	500	340	295/295	8-ø23/12-ø23
DN250/10"	600	405	350/355	12-ø23/12-ø28
DN300/12"	700	460	400/410	12-ø23/12-ø28
DN4O0/16"	900	580	515/525	16-ø28/16-ø31
DNS00/20"	1100	715	620/650	20-ø28/20-ø34

RKSfluid®

Product Display

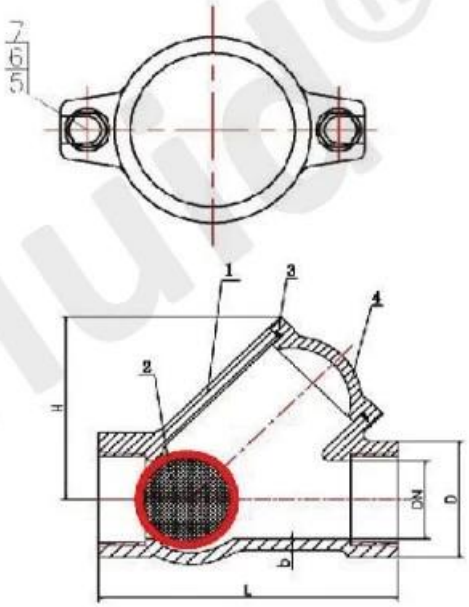

Ball Check Valve, Threaded

ITEM	PART NAME	MATERIAL
1	Body	Ductile iron
2	Ball	NBR
3	O-Ring	NBR
4	Cover	Ductile iron
5	Gasket	SS304

SIZE	DIN 3202 F6	Flange dimension(EN 1092-2) PN10/PN16		
DN	L	D	H	B
DN25	135	50	75	6
DN32	135	50	75	6
DN40	145	60	93	6
DN50	175	72	106	7
DN65	200	90	131	7

RKsfluid®

Company Advantages

01 21 years of professional experience

02 4 factories

03 Independent research and development team
28 top senior professional researchers

04 2 professional testing centers

05 100% high level ex-factory inspection

06 High quality imported materials

07 2 years quality assurance, repair and replacement

COMPANY INFORMATION

divanced Advanced CNC□□□

relaved□□□□□□□□□□□□□□□□□□□□□□□□□□□□□□□□□□□□□□□

us□□□□□□□□□□□□□□□□□□□□□□□□□□□□□□□□□□

inude□□□□□GB□□□□□□□□□□□□□□TUV CE□ISO 9001□ADWO-2000□TS□PED□WRC WRA□KTW□API 6D□API609□

VI□□ /□□□ /□□□□□□ □□□□□□□□□□□□

□□□□□

Q□□□□□□□□□□□□□□□□□□
A□□□□□□□□□□□□□□□□□□□□□□□

Q□□□□□□□□□□□□□
A□□□□□□hrdraulic□□□□□□□RKSfluid□□□□□□USA□□□□□□□□□□□□□□□□□□□□□□

Q□□□□□□□□□□□
A□RKSfluid□□□□□□□□□□□4□□□□□□□

Q□□□□□□
A□□□□□□2□5□□□□□□□□□□□□□□□□□□□□□□□□□□□

Q□Moq
A□□□□□□1PC□

Q□□□□□□□□□
A□□□□□100□□□□2□□□□□□□□□□□□□□□□
TUV□API□WRA□CE□ISO□□□□□□□
□□din□asme□bs en□jis□api□awwa□□□□□□□

Q□□□□□□□□□□□□□□□□□□□□□

A□RKSfluid□□□20□□□□□70□□□□R□D□□