RKSfluid®
A key Valve in Flow Control
Butterfly Valve
Ball Valve
Gate Valve
Globe Valve
Check Valve
Pipe Fittings

DESIGN FEATURES

- **Elastic** stainless steel sealing ring, **"0" leakage**
- **Fireproof** structural design, **blow-out proof** stems
- **Auto** welding **plasma powder** surfacing valve seat
- **Hollow** design, **reduces** flow resistance
- Interchangeable **DSS entity seal / multiple-piece stainless and graphite seal**
- **ISO5211** Mounting platform, simple connection

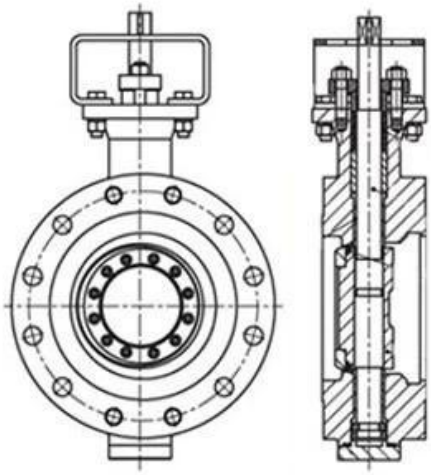

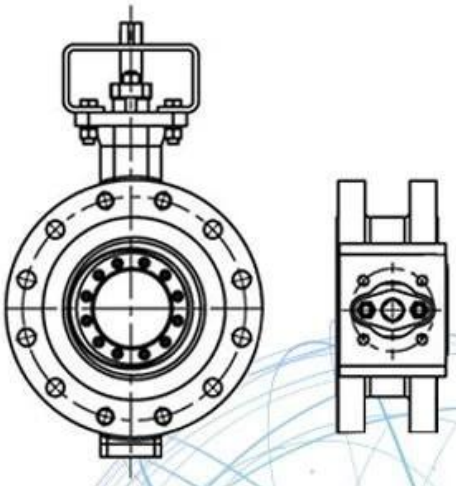

Application Scenario

Our Factory

Ⅰ□□□□□□□□□□□□□□□□□□□□□□□□□□□□

Ⅱ□□CNC□□□

Ⅲ□□

Ⅳ□□

V□□□□□GB□□□□□□□□□□□□□□□□□□□□□□□TUV□CE□ISO 9001□ADWO-2000□TS□PED□WRC
WRAS□KTW□API 6D□API609□

VI□□□/□□□/□□□□□□□□□□□□□□□□□□□□

Exhibition Photos
RKSfluid
RKSfluid®

Our Certificates
Real
Certificate
Zertifikat
WRAS
CERTIFICATE

□□□□□

Q□□□□□□□□□□□□□□□□□□□□□□□□□□□□□□□□□□□□□
A□□□□□□□□□□□□□□□□□□□Appllication□□□□□

Q□□□□□□□□□□□□□□□□□□□□□□□□□□□□□□□□□□□□
A□□□□□□□□Hrdraulic□□□□□ RKSfluid□□

Q□□□□□□□□□□□□□□□
A□RKSfluid□□□□□□□□□□□□□□□□4□□□□□□□□□□□□

Q□□□□□□□□□
A□□□□□□□2□5□□□□□□□□□□□□□□□□□□□□□□□□□□□□□□□□□□□

Q□MOQ
A□□□□□□□□1□□

Q□□□□□□□□□□□□□□□
A□□□□□100□□□□□□□□2□□□□□□□□□□□□□□□□□□□□□□□□□□□□□□□
□□□□□TUV□API□WRAS□CE□ISO□□□□□□□□□□□□
□□□DIN□ASME□BS EN□JIS□API□AWWA□□□□□□□□□

Q□□□□□□□□□□□□□□□□□□□□□□□□□□□□□□□□□□
□RKSfluid□□□20□□□□□□70□□□□□R□D□□□