https://www.alibaba.com/product-detail/CF8M-valve-disc-square-hole-price_1600153172850.html?spm=a2747.manage.0.0.680671d2Dla120

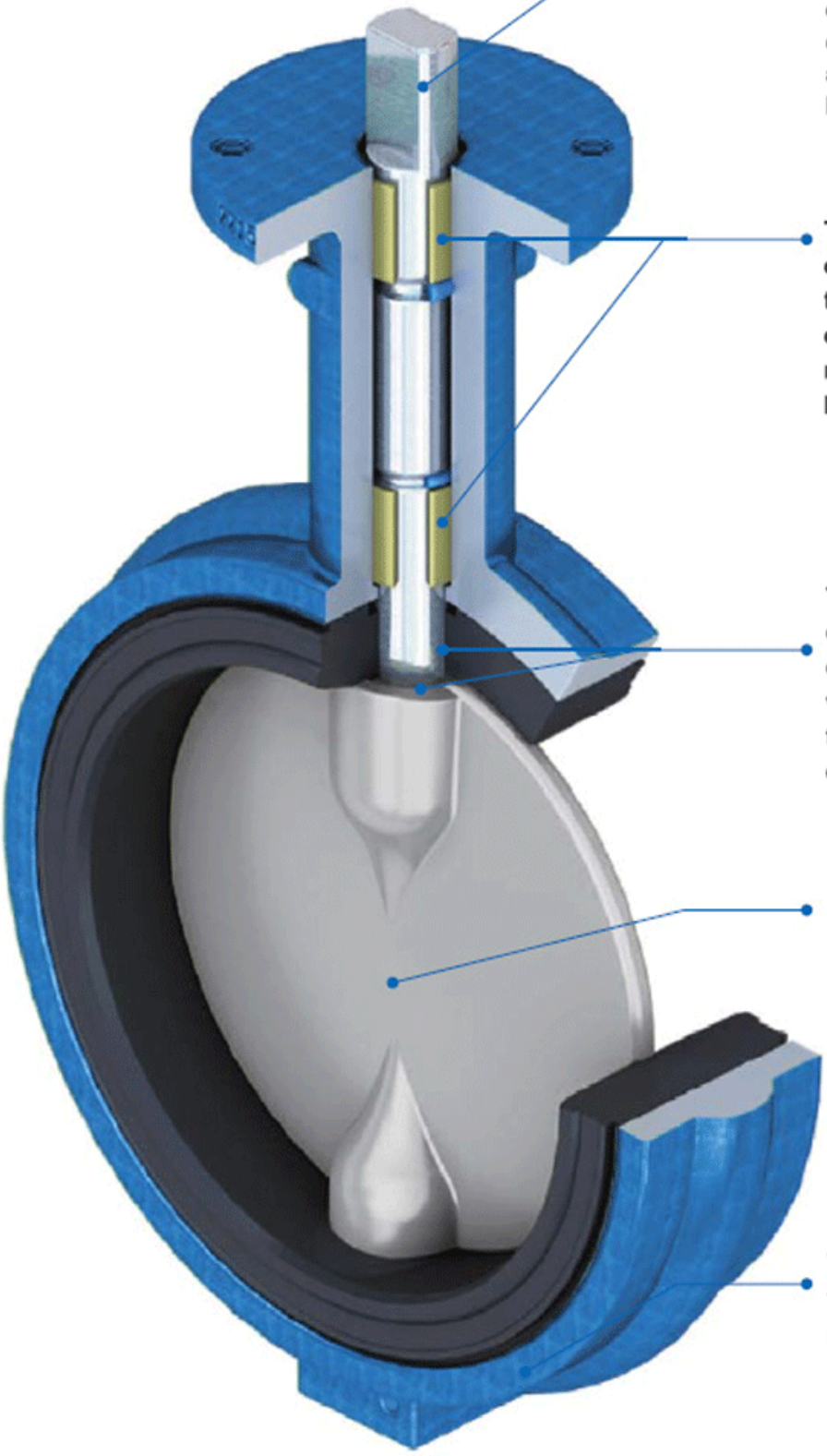

The valve stem is designed for dust-proof and blow-proof in two stages, meeting the requirements of protection grade IP65. The connection between the valve stem and the valve plate is pin free, with higher strength.

The valve body adopts the design of 3 bearings, which are located in the upper, middle and lower parts of the valve body, effectively reducing wear and improving service life.

The seal of RKS valve is ball type double direction bubble class seal, dry type valve shaft, eliminate the valve shaft contact medium, ensure the service life and torque stability of the product.

The valve plate is pin-less, and the shape design is symmetrical design on the center line. When fully open, the flow resistance loss is small, the medium flow state is good, and the noise and vibration during flow are small.

Valve body for internal and external full spray design, with good corrosion resistance

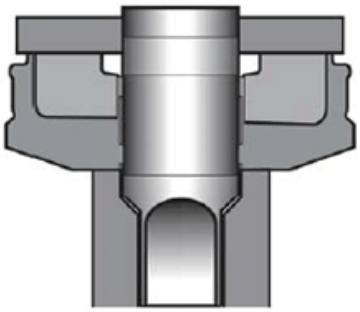

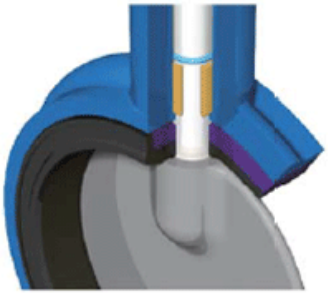

The composite seat of the RKS valve is formed by permanently gluing an elastomer to a rigid gasket ring.In addition to superior seal integrity, this design makes valve installation easier while reducing high torque and premature failure due to rubber deformation. Modular design simplifies seat replacement and ensures economical maintenance

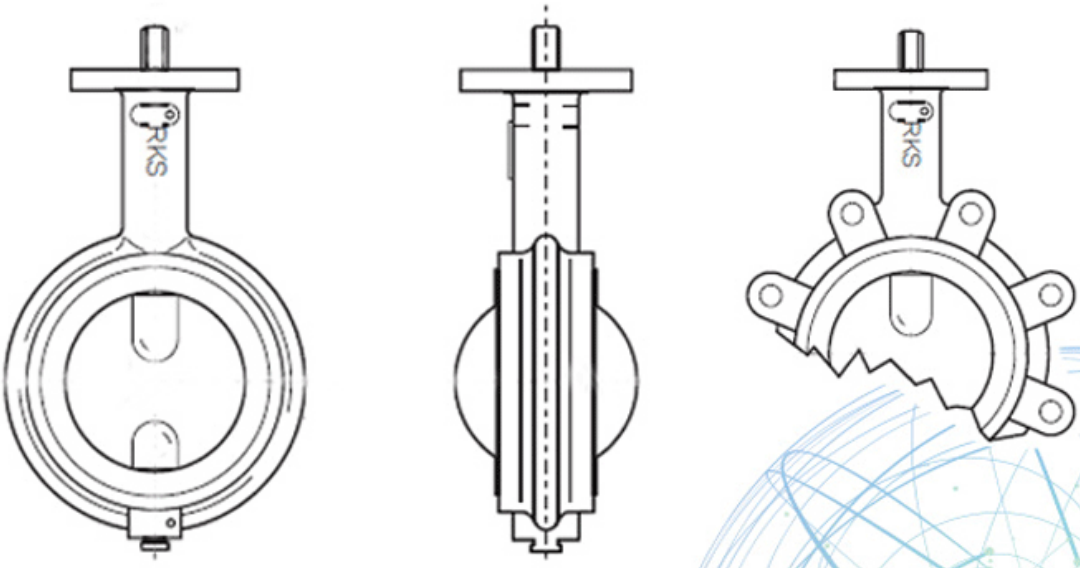

Application Scenario

Our Factory

Ⅰ□□□□□□□□□□□□□□□□□□□□□□□□□□□

Ⅱ□□□CNC□□

Ⅲ□□□□□□□□□□□□□□□□□□□□□□□□□□□□□□□□□□□□□□

Ⅳ□□□□□□□□□□□□□□□□□□□□□□□□□□□□□□□□□

V□□□□GB□□□□□□□□□□□□□□□TUV CE□ISO 9001□ADWO-2000□TS□PED□WRC WRAS□KTW□API 6D□API609□

VI□□□□□ □□/□□□/□□□□□□□□□□□□□□□□□□□□□

Exhibition Photos
RKSfluid
Our Certificates
Real
Certificate
Zertifikat
WRAS
CERTIFICATE

□□□□□□

Q□□□□□□□□□□□□□□□□□□□□□□
A□□□□□□□□□□□□□□□□□□□□□□□□□

Q□□□□□□□□□□□□□□
A□□□□□□Hrdraulic□□□□□□□□ RKSfluid□□□□□□USA□□□□□□□□□□□□□□□□□□□□□□□□□□

Q□□□□□□□□□□□□□
A□RKSfluid□□□□□□□□□□□□4□□□□□□□□□□

Q□□□□□□□□
A□□□□□□2□5□□□□□□□□□□□□□□□□□□□□□□□□□□

Q□MOQ
A□□□□□□□1□□

Q□□□□□□□□□□
A□□□□100□□□□□□2□□□□□□□□□□□□□□□□□□□□□□□□□
TUV□API□WRAS□CE□ISO□□□□□□□□□
□□□DIN□ASME□BS EN□JIS□API□AWWA□□□□□□□□

Q□□□□□□□□□□□□□□□□□□□□□□□□
A□RKSfluid□20□□□□□□□70□□□R□D□□□□□□□□□□□□□□□□□□□□□□□□□□□□□