RKSfluid®
A key Valve in Flow Control
Butterfly Valve
Ball Valve
Gate Valve
Globe Valve
Check Valve
Pipe Fittings

PTFE Butterfly Valve

| |
|---|
| BSEN 1092, DIN 2501, ANSI, JIS, AS2129 |
| Size:DN50~DN600 |
| Body:Ductile Iron |
| Disc:Ductile Iron+PTFE |
| Seat: PTFE |
| Connection: Wafer, Lug, Flange |

PTFE Butterfly Valve

| |
|---|
| BSEN 1092, DIN 2501, ANSI, JIS, AS2129 |
| Size: DN50~DN600 |
| Body: Ductile Iron |
| Disc: Ductile Iron+PTFE |
| Seat: PTFE |
| Connection: Wafer, Lug, Flange |

PTFE Butterfly Valve

| |
|---|
| BSEN 1092, DIN 2501, ANSI, JIS, AS2129 |
| Size: DN50~DN600 |
| Body: WCB, CF8, CF8M |
| Disc: CF8+PTFE, CF8M+PTFE |
| Seat: PTFE |
| Connection: Wafer, Lug |

PTFE Butterfly Valve

| |
|---|
| BSEN 1092, DIN 2501, ANSI, JIS, AS2129 |
| Size: DN50~DN600 |
| Body: WCB, CF8, CF8M |
| Disc: CF8+PTFE, CF8M+PTFE |
| Seat: PTFE |
| Connection: Wafer, Lug |

PTFE Butterfly Valve

| |
|---|
| BSEN 1092, DIN 2501, ANSI, JIS, AS2129 |
| Size: DN50~DN600 |
| Body: Ductile Iron |
| Disc: CF8 , CF8M |
| Seat: PTFE |
| Connection: Wafer, Lug, Flange |

PTFE Butterfly Valve

| |
|---|
| BSEN 1092, DIN 2501, ANSI, JIS, AS2129 |
| Size: DN50~DN600 |
| Body: WCB |
| Disc: CF8 +PTFE, CF8 +PFA |
| Seat: PTFE |
| Connection: Wafer, Lug, Flange |

Resilient seat butterfly valve

| |
|---|
| PN10/PN16, ANSI 125LB/150LB,5K/10K |
| Size:DN25-DN2400 |
| Body:DI CI |
| Disc: Stainless steel |
| Seat :EPDM, NBR, Viton |
| Connection: Wafer, Lug, Flange |

Resilient seat butterfly valve

| |
|---|
| PN10/PN16, ANSI 125LB/150LB,5K/10K |
| Size:DN25-DN2400 |
| Body:DI CI |
| Disc: DI+ Nylon |
| Seat :EPDM, NBR, Viton |
| Connection: Wafer, Lug, Flange |

Resilient seat butterfly valve

| |
|---|
| PN10/PN16, ANSI 125LB/150LB,5K/10K |
| Size:DN25-DN2400 |
| Body:DI CI |
| Disc: Stainless steel |
| Seat :EPDM, NBR, Viton |
| Connection: Wafer, Lug, Flange |

Resilient seat butterfly valve

| |
|---|
| PN10/PN16, ANSI 125LB/150LB,5K/10K |
| Size:DN25-DN2400 |
| Body:DI CI |
| Disc: Stainless steel |
| Seat :EPDM, NBR, Viton |
| Connection: Wafer, Lug, Flange |

Double flange resilient seat butterfly valve

| |
|---|
| PN10/PN16, ANSI 125LB/150LB, 5K/10K |
| Size:DN50-DN1000 |
| Body:DI CI |
| Disc: Stainless steel |
| Seat :EPDM, NBR, Viton |
| Connection: Flange |

Short-neck butterfly valve for petroleum

| |
|---|
| ANSI 125LB/150LB |
| Top Flange Standard:ISO5211 |
| Size:2"-12" |
| Body: DI CI |
| Disc :Stainless Steel |
| Seat : EPDM, NBR, Viton |
| Connection:Wafer, Lug |

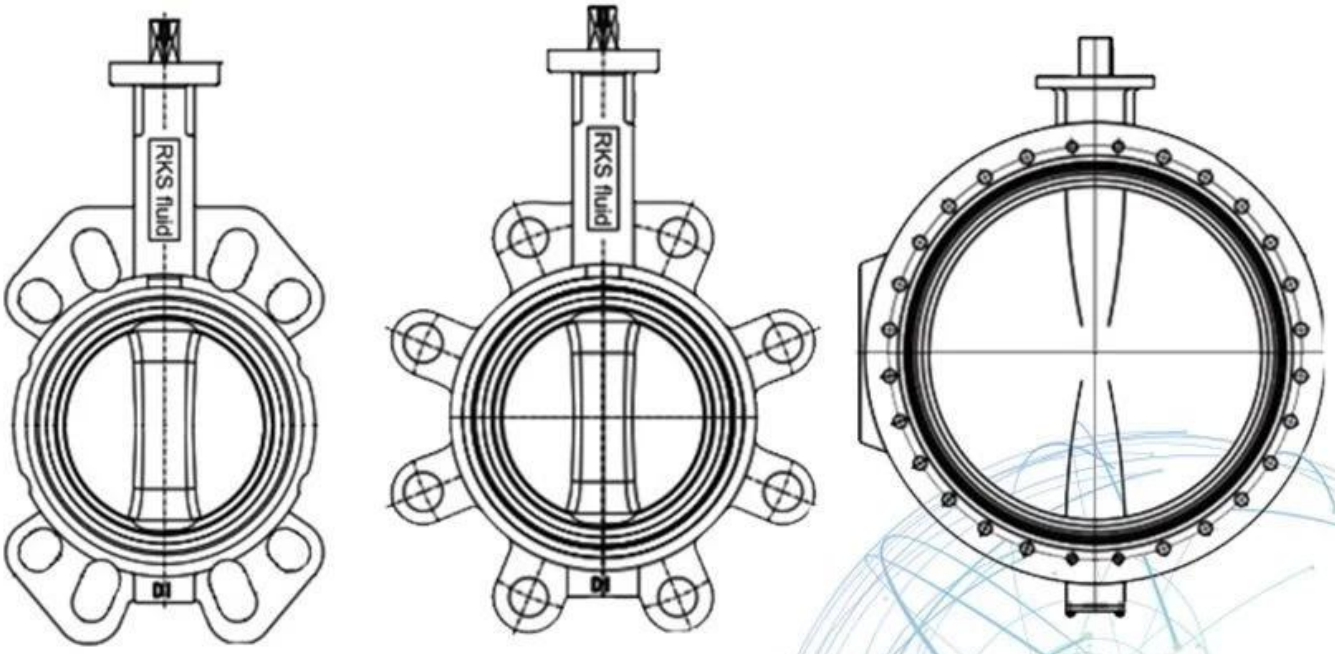


## Application Scenario

# Our Factory

## Company Advantages

01 21 years of professional experience

02 4 factories

03 Independent research and development team
28 top senior professional researchers

04 2 professional testing centers

05 100% high level ex-factory inspection

06 High quality imported materials

07 2 years quality assurance, repair and replacement

RKSfluid□ 1997 □□ □□□□□□□□. □□□ □□□□□
□□ □□, □□ □□ □□ □ □□ □□ □□. □□
CNC □□□ □□, □□ □□ □, □□□□ □□□□
□□ □□, □□ □□ □ □□ □□. □□□ □□□ □□ □□□□□□□.
□□ □□. □□ □□□ □□□ □□□ □□□□□ □□□ □□□ □□
□□□, □□ □□ □□ □□□ □□ GB□□□ □□
□□ □□ □□ □□ □□. □□□□ □□
□□ □□□□ □ □□ □□ □□ □ RKS □□ □□
□□, □□, □□□□□ □□□ □ □□. □□ □□□ □□□□. □□□ □□ □□ □□
□□ : GB, ISO, □□ □ □□ □□, CE □ ADWO-2000□ □□ TUV□□ □□,
ISO9001, TS, API. □□□ □□ : □□, □□ □ □□ □□ □ □□,
□□ □□□ □□ □ □□□ □□. □□ □□, □□ □□ □□. □□ □
□□ : □□ □□, □□, □□□, □□, □□ □□, □□ □□ □, □□□ □□□,
□□ □□. □□□□ □□ □□□ □□□ □□ □□□□ □□□ □□□□□.
"□□ □ □□, □□□ □□ □ □□□□ □□"□ □□□□□
□□ □□ □□. □□ □□□ □□□ □□ □□□□□!

I □□ □□ : □□ □□ □□, □□ □ □□ □□ □□.

II □□ CNC □□□ □□, □□ □□ □, □□ □□, □□ □□ □□ □ □□.

III □□ □□ □□ □□□ □□□ □□□□ □□ □□□ □□ □□ □□.

IV □□ □□□ □□□□ □□ □□ □□□ □□□□.

V □□ □□ : GB, □□ □□, □□ □□, TUV CE, ISO 9001, ADWO-2000, TS, PED, WRC WRAS, KTW, API 6D, API609.

VI □□ □□□ : □□ □□□ □□, □ □□, □□□ □□, □□ □□, □□□ □□, □□□ □□, □□ / □□ / □□ □□□□□, □□ □□.

## Exhibition Photos

## Our Certificates

□□□□ □□

Q : □□□ □□□ □□ □□ □□□ □□□□□?
A : □□ □□, □□, □□, □□, □□ □□□.

Q : □□□□□□ □□ □ □ □□□□?
A : □□□, □□□, □□□, □□□□□ □□. RKSfluid □□□□□□ □□ □□□ □□□□□. □□□ □□□□□, □□□□ □□□□□□.

Q : □□ □□□ □□□□□?
A : RKSfluid□□ □□□ □□□ □□ □ □□□ 4 □□ □□□ □□□□.

Q : □□ □□ □□
: □□ □□ □□ 2 ~ 5 □. □□□ □□ □□□ □□.

Q : MOQ
: 1 □ □□ □□.

Q : □□□ □□ □□□?
: 100 % □□ □□□ □□ □□ 2 □ □□. □□□ □□ □□□ □□□□□□.
□□□ TUV, API, WRAS, CE, ISO □□□ □□□□□.
□□□ DIN, ASME, BS EN, JIS, API, AWWA□ □□□□□.

Q : □□□ □□□□ □□□ □□□□ □□ □ □ □□□□?
A : RKSfluid□ 20 □□ □□□ □□□□ □□□ 70 □ □□□ R & D □□□□□ □□ □□, □□ □□ □ □□ □□□ □□□□□.