RKSfluid®
A key Valve in Flow Control
Butterfly Valve
Ball Valve
Gate Valve
Globe Valve
Check Valve
Pipe Fittings

Resilient seat butterfly valve

PN10/PN16, ANSI 125LB/150LB,5K/10K
Size:DN25-DN2400
Body:DI CI
Disc: Stainless steel
Seat :EPDM, NBR, Viton
Connection: Wafer, Lug, Flange

Resilient seat butterfly valve

PN10/PN16, ANSI 125LB/150LB,5K/10K
Size:DN25-DN2400
Body:DI CI
Disc: DI+ Nylon
Seat :EPDM, NBR, Viton
Connection: Wafer, Lug, Flange

Resilient seat butterfly valve

PN10/PN16, ANSI 125LB/150LB,5K/10K
Size:DN25-DN2400
Body:DI CI
Disc: Stainless steel
Seat :EPDM, NBR, Viton
Connection: Wafer, Lug, Flange

Resilient seat butterfly valve

PN10/PN16, ANSI 125LB/150LB,5K/10K
Size:DN25-DN2400
Body:DI CI
Disc: Stainless steel
Seat :EPDM, NBR, Viton
Connection: Wafer, Lug, Flange

Double flange resilient seat butterfly valve

PN10/PN16, ANSI 125LB/150LB, 5K/10K
Size:DN50-DN1000
Body:DI CI
Disc: Stainless steel
Seat :EPDM, NBR, Viton
Connection: Flange

Short-neck butterfly valve for petroleum

ANSI 125LB/150LB
Top Flange Standard:ISO5211
Size:2"-12"
Body: DI CI
Disc :Stainless Steel
Seat : EPDM, NBR, Viton
Connection:Wafer, Lug

PTFE Butterfly Valve

BSEN 1092, DIN 2501, ANSI, JIS, AS2129
Size:DN50~DN600
Body:Ductile Iron
Disc:Ductile Iron+PTFE
Seat: PTFE
Connection: Wafer, Lug, Flange

PTFE Butterfly Valve

BSEN 1092, DIN 2501, ANSI, JIS, AS2129
Size: DN50~DN600
Body: Ductile Iron
Disc: Ductile Iron+PTFE
Seat: PTFE
Connection: Wafer, Lug, Flange

PTFE Butterfly Valve

BSEN 1092, DIN 2501, ANSI, JIS, AS2129
Size: DN50~DN600
Body: WCB, CF8, CF8M
Disc: CF8+PTFE, CF8M+PTFE
Seat: PTFE
Connection: Wafer, Lug

PTFE Butterfly Valve

BSEN 1092, DIN 2501, ANSI, JIS, AS2129
Size: DN50~DN600
Body: WCB, CF8, CF8M
Disc: CF8+PTFE, CF8M+PTFE
Seat: PTFE
Connection: Wafer, Lug

PTFE Butterfly Valve

BSEN 1092, DIN 2501, ANSI, JIS, AS2129
Size: DN50~DN600
Body: Ductile Iron
Disc: CF8 , CF8M
Seat: PTFE
Connection: Wafer, Lug, Flange

PTFE Butterfly Valve

BSEN 1092, DIN 2501, ANSI, JIS, AS2129
Size: DN50~DN600
Body: WCB
Disc: CF8 +PTFE, CF8 +PFA
Seat: PTFE
Connection: Wafer, Lug, Flange

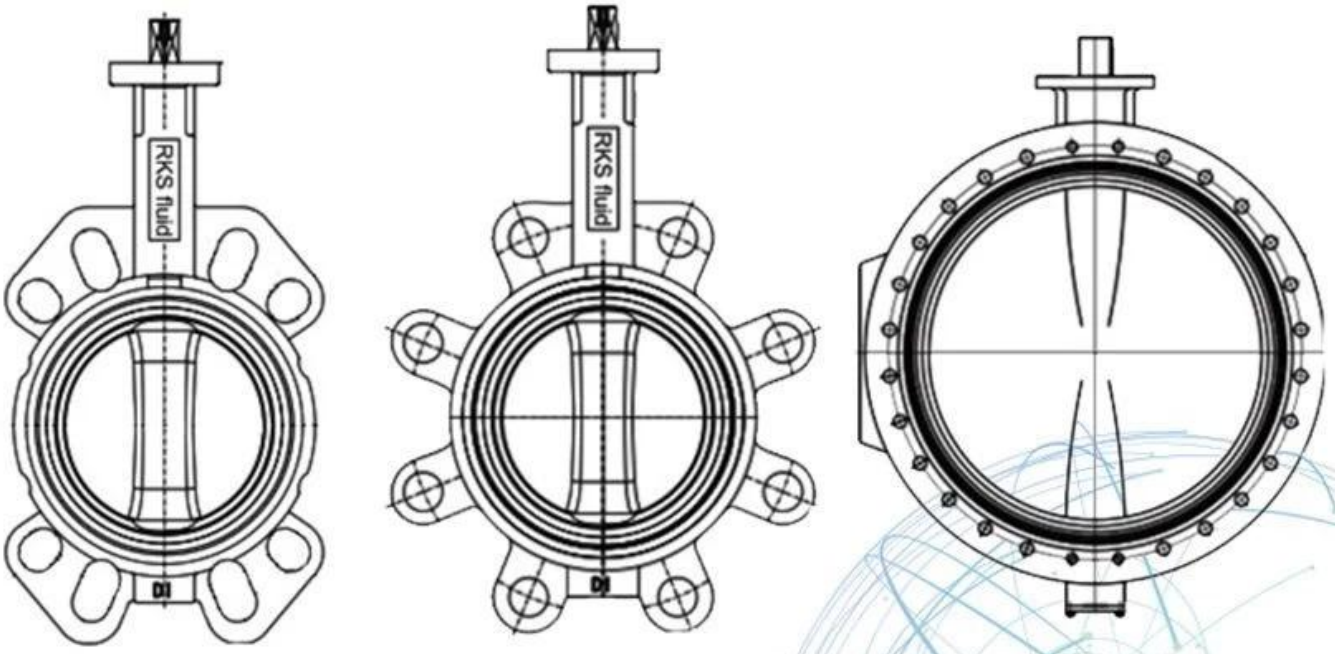

Application Scenario

Our Factory

Company Advantages

01 21 years of professional experience

02 4 factories

03 Independent research and development team
28 top senior professional researchers

04 2 professional testing centers

05 100% high level ex-factory inspection

06 High quality imported materials

07 2 years quality assurance, repair and replacement

RKSfluid□ 1997 □□ □□□□□□□. □□□ □□□□□
□□, □□ □ □□ □□ □ □□ □□ □□. □□
□□□□ □□ □□ □□ □□, □□ □□ □, □□□□ □□□□□ □□□□□.
□□ □□, □□ □□ □ □□ □□. □□□ □□□ □□ □□□□
□□ □ □□. □□ □□□ □□□□□□ □□□ □□□□□ □□□ □□□ □□
□□□, □□ □□ □□ □□□ □□ GB□□□ □□
□□ □□ □□ □□ □□□. □□□ □□□ □□
□□ □□ □□ □ □□ □□, RKS□ □□ □□
□□, □□ □ □□□□□ □□□ □ □□. □□ □□□ □□□□. □□□ □□ □□ □□
□□ □□ : GB, ISO, □□ □ □□ □□, CE □ ADWO-2000□ □□ TUV □□
ISO9001, TS, API. □□□ □□ : □□, □□ □ □□ □□ □ □□
□□ □□□ □□ □ □□□ □□. □□ □□, □□ □□ □□. □□ □
□□ : □□ □□, □□, □□□, □□, □□ □□, □□□□ □□□, □□□ □□□,
□□ □□ : □□□□ □□ □□, □□□ □□ □□□□ □□□ □□□□□
□□□ □□ "□□ □ □□, □□□ □□ □ □□□□ □□"□ □□□□□
□□ □□ □□. □□ □□□ □□□ □□ □□□□□! RKSfluid□ 1997 □□ □□□□□□□.
□□□ □□ □
□□, □□ □ □□ □□ □ □□ □□ □□. □□
□□□□ □□ □□ □□ □□, □□ □□ □, □□□□ □□□□□ □□□□□.
□□ □□, □□ □□ □ □□ □□. □□□ □□□ □□ □□□□
□□ □ □□. □□ □□□ □□□□□□ □□□ □□□□□ □□□ □□□ □□
□□□, □□ □□ □□ □□□ □□ GB□□□ □□
□□ □□ □□ □□ □□□. □□□ □□□ □□
□□ □□ □□ □ □□ □□, RKS□ □□ □□
□□, □□ □ □□□□□ □□□ □ □□. □□ □□□ □□□□. □□□ □□ □□ □□
□□ □□ : GB, ISO, □□ □ □□ □□, CE □ ADWO-2000□ □□ TUV □□
ISO9001, TS, API. □□□ □□ : □□, □□ □ □□ □□ □ □□
□□ □□□ □□ □ □□□ □□. □□ □□, □□ □□ □□. □□ □
□□ : □□ □□, □□, □□□, □□, □□ □□, □□□□ □□□, □□□ □□□,
□□ □□ : □□□□ □□ □□, □□□ □□ □□□□ □□□ □□□□□
□□□ □□ "□□ □ □□, □□□ □□ □ □□□□ □□"□ □□□□□
□□ □□ □□. □□ □□□ □□□ □□ □□□□□!

□□ □□ : □□ □□ □□, □□ □ □□ □□ □□.

II □□ □□ □□ □□ □□, □□ □□ □, □□ □□, □□ □□ □□ □ □□.

III □□ □□□ □□ □□ □□□ □□□□ □□ □□□ □□ □□ □□.

IV □□ □□□ □□□□ □□ □□ □□□ □□□□.

Prodotto □□ □□ : GB, □□ □□, □□ □□, TUV CE, ISO 9001, ADWO-2000, TS, PED, WRC WRAS, KTW, API 6D, API609.

VI □□ □□□ : □□ □□□ □□, □ □□, □□□ □□, □□ □□ □□, □□□ □□, □□□ □□, □□ / □□ / □□ □□□□□, □□ □□.

Exhibition Photos

□□□□ □□

Q : □□□ □□□ □□ □□ □□□ □□□□□?
A : □□ □□, □□, □□, □□, □□, □□ □□□.

Q : □□□□□□ □□□ □ □□□□?
A : □□, □□, □□ □□□□□ □□. RKSfluid □□□□□□ □□ □□□ □□□□□. □□□ □□ □□□□□□.

Q : □□□ □□ □□□ □□□□□?
A : RKSfluid□□ □□□ □□□ □□□ □□□ 4 □□ □□□ □□□□.

Q : □□ □□ □□
A : □□□□ □□□ 2 ~ 5 □□ □□□ □ □□□□. □□□ □□ □□□ □□□□.

Q : MOQ
: 1 □ □□ □□.

Q : □□□ □□ □□□?
: 100 % □□ □□□ □□ □□ 2 □ □□. □□□□ □□□□ □□□□□ □□□□□□.
□□□ TUV, API, WRAS, CE, ISO □□□ □□□□□□.
DIN, ASME, BS EN, JIS, API, AWWA □□□ □□□□□.

Q : □□□□ □□□ □□□ □□□□ □□ □ □ □□□□?

A : RKSfluid□ 20 □□ □□□ □□□□ □□□ 70 □ □□□ □□ □□ □□□□□ □□ □□, □□ □□ □ □□ □□□□ □□□□□.
□□ □□□ □□ □ □□ WM □□ □□□ □□ □□ □□ □□□